Sliding Gate Opener
User Manual
SL600AC

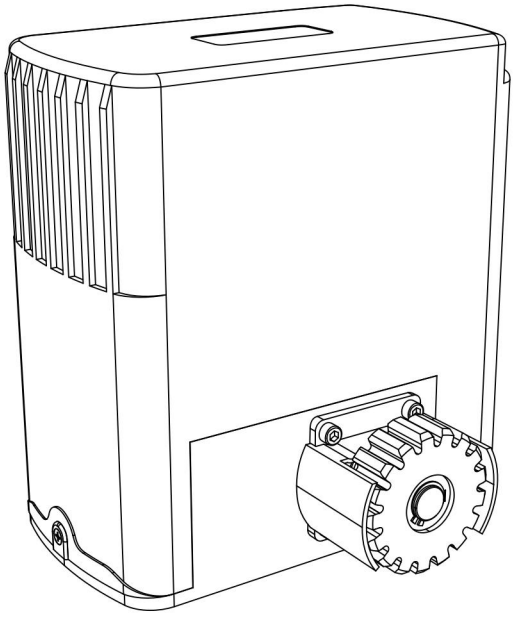

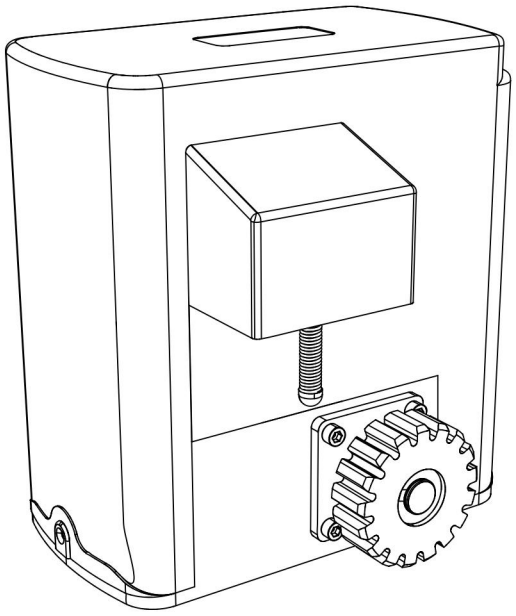

WARNING

Instructions must be read before installation. Please follow these instructions carefully, incorrect installation could affect gate operation.
When mounting and positioning this product please ensure the power cable is unplugged. The motor cover will need to be removed to mount the motor to the mounting plate or directly to the concrete footing. Any changes to the settings on this product can only be made by a licensed electrician. This product is only powered by AC110V/220V power supply; DC backup battery or solar power is not compatible.

CONTENTS

Default Setting Instruction.....1
Safety Instruction.....2
Parts List.....3
Technical Parameters.....5
Installation.....5
Before You Start.....5
Tools Required / Example Sliding Gate…….....5
Step 1 - Gate Preparation.....6
Step 2 - Checking Manual Release.....6
Step 3 - Removing / Installing Motor Cover.....7
Step 4 – Motor Pad Footing.....7
Step 5 - Fitting Mounting Plate and Motor.....8
Step 6 - Gear Rack & Motor Alignment.....10
Step 7 - Limit Switch Stops.....11
Step 8 - Powering on.....14
Step 9 - Testing Travel and Limit Stops.....15
AStandard Control Board.....17
Programming and Wiring.....17
DIP Switch Adjustment.....18
Terminal Instructions.....19
Wiring to the Terminal.....19
Connecting Infrared Photocells.....21
WIFI Controller (Optional).....22
Remote Control Operation.....27
B Intelligent Control Board.....28
Programming and Wiring.....28
DIP Switch Adjustment.....29
Potentiometer Adjustment.....30
Terminal Instructions.....31
Wiring to the Terminal.....31
Connecting Infrared Photocells.....33
WIFI Controller (Optional).....34
Remote Control Operation.....39
Maintenance.....40
Troubleshooting.....41
Drawing and Measurements.....42

Default Setting Instruction

The gate opener will open the gate to the right-hand side as its default setting. By default, the opener mounts on the right-hand side. (Figure 1)

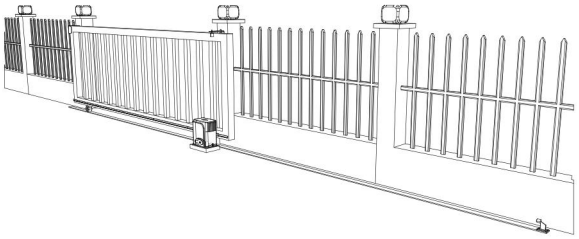

Gate in closed position

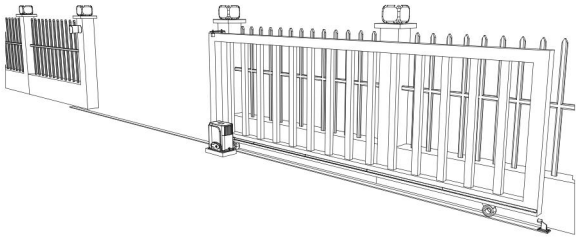

Gate in open position

Figure 1

Before installation: Test the gate opener by plugging it into a power source and pressing the remote. Press the opening button, the output gear rotates, then press the stop button, the output gear stops rotating. Finally, press the closing button, the output gear rotates to the opposite direction. This will give you an understanding of the way in which the opener will move the gate.

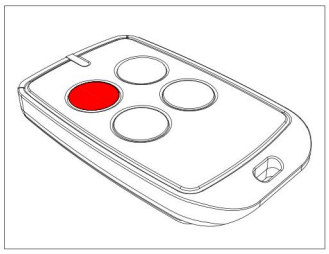

Press the first/top button on the remote.

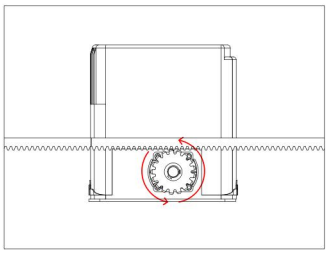

Rotating output gear will drive the gate frame.

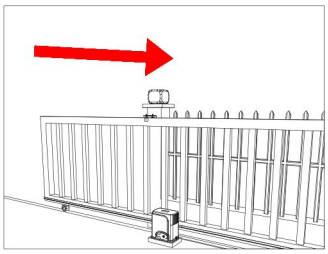

Then the gate will move in the set direction.

Figure 2

Note: Ensure that the gate opener is unplugged before proceeding with installation. Please keep fingers away from the motor output gear whilst it is turning.

If your gate needs to open from the other direction (to the left, refer to figure 3), your opener needs to be mounted on the left-hand side as shown, the relative wires need to be swapped over, please check under “Terminal Instructions” for swapping. (Factory default setting is for right-hand opening: opener mounted on the right-hand side).

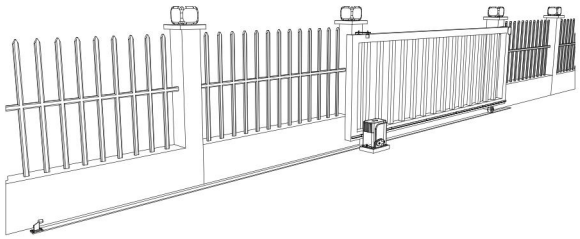

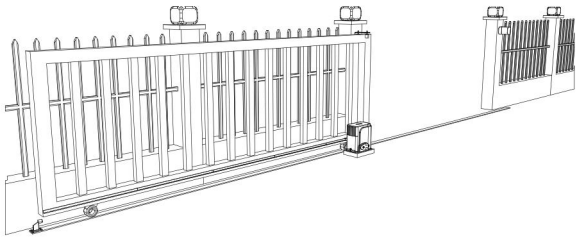

Figure 3

Any works done to the gate opener must be completed whilst the power is off, and the opener is unplugged.

Safety Instruction

Warning: Incorrect or improper use of this product can cause damage to persons, animals or properties.

- Please ensure that the input voltage used matches with the supply voltage of gate opener.
- All modifications to wiring or electrics, and any adjustment or maintenance to input voltage must be done by a qualified electrician.
- All potential hazards and exposed pinch points of the gate must be eliminated or guarded prior to installation of this gate opener.
- Never mount any device that operates the gate opener where the user can reach over (under, around or through) the gate to operate the controls. These must be placed away from any moving range of the moving gate.
- Ensure power plug is disconnected from the power socket during installation or maintenance.
- Keep remote control and other control devices out of children's reach, in order to avoid unintentional activation.
- To ensure safety, before installing the motor, mount a Gate End Catch and a Gate Stop at each end of the rail to prevent the gate travelling off the track.
- If required, install infrared photocell to detect obstructions and prevent injury to person or damage to property.
- Instruct all users about the control systems provided and the manual opening operation in case of emergency.
- Ensure that the power cable is connected to a RCD protected weatherproof power outlet installed by a qualified electrician.
- Do not install this product in an explosive atmosphere or where there is any danger of flooding.
- This product was exclusively designed and manufactured for the use specified in the present documentation. Any other use not specified in this documentation could damage the product and be dangerous.
- Only use original parts for any maintenance or repair operation. Our company declines all responsibility with respect to the automation safety and correct operation when other supplier's components are used.
- Do not modify the automation components, unless explicitly authorized by our company.
- The user must avoid any attempt to carry out any works or repairs on this product, and should always request the assistance of qualified personnel.
- This product is suitable for use on one sliding gate only.
- Anything which is not expressly provided for in these instructions is not allowed and will void warranty.
- Dispose of all packing materials (plastic, cardboard, polystyrene etc.) according to current guidelines. Keep plastic bags and polystyrene out of children's reach.
- Save these instructions for future use.

Parts List

Parts List (standard configuration)

No.	Picture	Name	Quantity
1	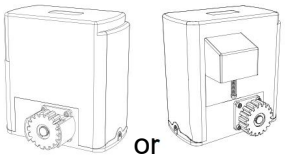 or	Motor	1
2		Manual Release Keys	2
3		Remote Controls	2
4	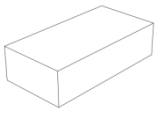	Spring Limit Switch Accessories Box/ Magnetic Limit Switch Accessories Box	1
4-1-1	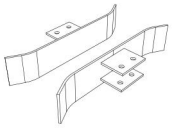	Spring Limit Switch Stop	1 set
		Spring Limit Switch Stop Mounting Screw M6X10	4
4-1-2	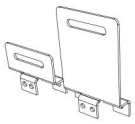	Magnetic Limit Switch Stop	1 set
		Magnets	2
		Magnetic Limit Switch Stop Mounting Screws M6X18	4
		Nuts M8	4
		Flat Washers φ8	2
		Spring Washers φ8	2
5	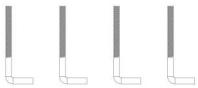	Anchor Bolt M8	4

No.	Picture	Name	Quantity
5-1	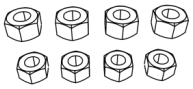	Nuts M8	8
5-2	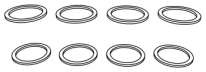	Flat Washers φ8	8
5-3	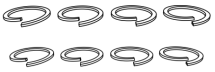	Spring Washers φ8	8

Note: Extra flat washers and spring washers are spare parts.

Parts List (optional)

No.	Picture	Name	Quantity
1	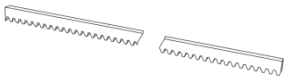	Galvanized Gear Rack	1m/pc
2		Nylon Gear Rack	1m/pc
3		Infrared Photocell	1
4		Wireless Keypad	1
5		Alarm Lamp	1
6		Output Gear Cover	1
7	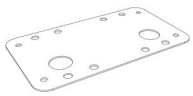	Mounting Plate	1
8		Hexagon Head Bolt M8X40	4

Additional remote controls: Spare/Additional remotes for the automatic gate kit, these will need to be paired to the motor.
Infrared photocell: Detects pedestrians, vehicles and objects that cross an infrared beam and prevents the gate from closing.
Wireless keypad: Allows secure access through the gate used with a user set code.
Wired control: Allow users to control the opening and closing of the door through an external push-button.
Alarm lamp: Alerts people near the gate and users that the gate is in operation.

Technical Parameters

Model	**SL600AC**
Power Supply	110VAC/60Hz; 220VAC/50Hz
Motor Power	280W
Gate Moving Speed	13m/min
Maximum Loading Weight	600KG
Remote Control Distance	≥ 30m
Remote Control Mode	Single button mode / Three button mode
Limit Switch	Spring limit switch / Magnetic limit switch
Working Noise	≤ 58dB
Working Duty	S2, 15min
Recording of up Remote Controls	Standard control board: 25; Intelligent control board: 40
Remote Frequency	433.92 MHz
Working Temperature	-20°C - +70°C
Package Weight	9.4KG

Installation

Before You Start

- SL600AC Sliding Gate Automation Kit is suitable for powering the opening and closing motion of gates up to 600kg in weight, up to a length of 8m.
- Gate motion is achieved by the rotating output gear of the gate opener driving the gear rack (sold separately) fitted to the moving gate.
- The gate opener requires you to press the remote control once to open, and once again to close. This is a safety feature to ensure safe operation.
- The opener must be fitted within private property, never externally to a property's boundary.

Any works done to the gate opener must be completed whilst the power is off and the opener is unplugged. Any modifications/alterations/works to AC power components must only be completed by a licensed electrician.

Tools Required

- Tape measure
- Level
- 12mm concrete drill and hammer (when uses expansion screws)
- Phillips head screwdriver
- Straight screwdriver

Example Sliding Gate

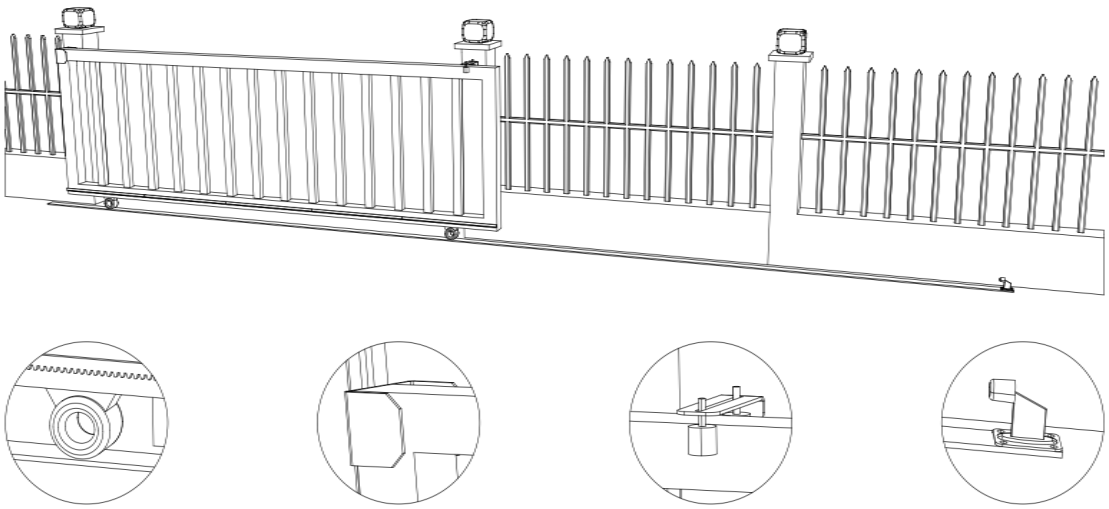

Gate Track and Track Wheels | Gate End Catch | Gate Guide Rollers | Gate Stop

Figure 4

Please ensure that the gate opener power cable is not plugged in at any stage before Step 8.

Step 1 - Gate Preparation

- Ensure that the sliding gate is correctly installed.
- The gate is horizontal and level and the gate can glide back and forth smoothly when moved by hand before installing the gate opener.
- Wheels and guide rollers should rotate easily and be free from dirt or grime.
- Track should be flat, level and firmly affixed.
- Any misalignment in the gate will affect performance of the automatic gate opener.

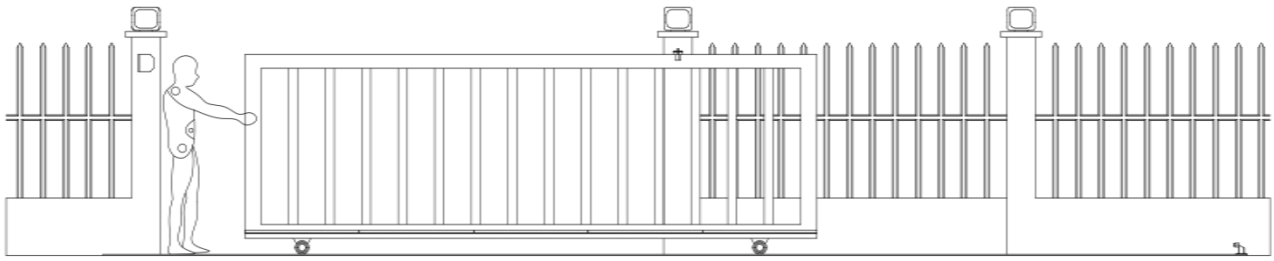

The gate should slide smoothly by hand before attempting to install the gate opener.

Figure 5

Step 2 - Checking Manual Release

- Insert the key and open the manual release bar to enable the motor get into manual mode and check that the motor output gear rotates freely by hand (Figure 6).

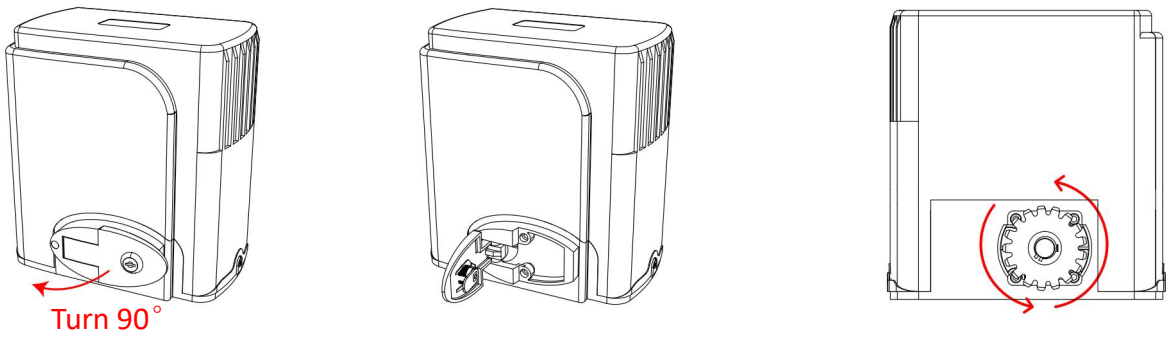

To make the motor into manual mode, insert the key and open the manual release bar till it rotates by 90° .

In manual mode, the gear can turn freely and the gate can be operated by hand.

Figure 6

Step 3 - Removing / Installing Motor Cover

- Unscrew the two cover screws located at each side of the motor cover.
- Remove the rubber grommet below the limit switch (Figure 7).

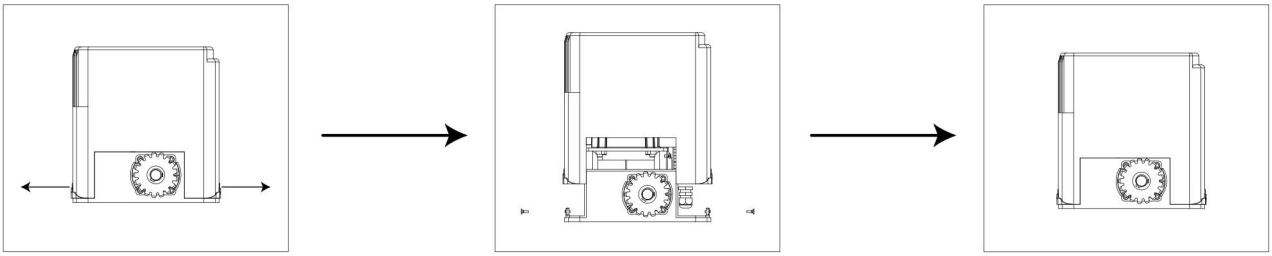

Figure 7

Please Note: the rubber grommet must be fitted back onto the motor cover once the cover has been re-fitted/replaced onto the base of the motor.

Step 4 - Motor Pad Footing

- The motor pad concrete footing requires an area of no less than 400mm long x 250mm wide and a minimum depth of 200mm (Standard requirement).
- Ensure surface is level and parallel to the driveway.

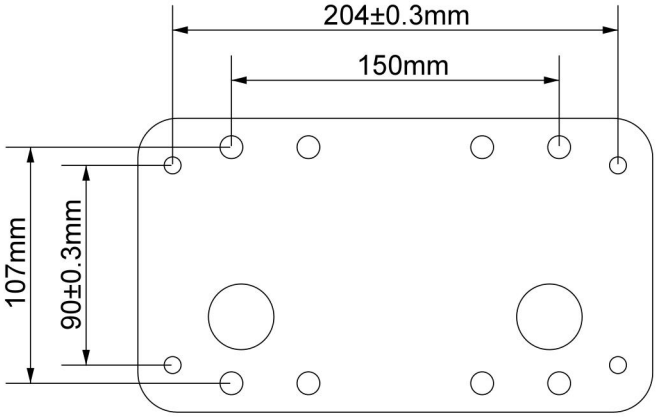

Mounting Plate Dimensions

Figure 8

Step 5 - Fitting Mounting Plate and Motor

Without Mounting Plate

· Pre embed the anchor bolts according to holes in motor base before concerting (as per Figure 9).
· Afater concrete hardening, bolt the motor with spring and flat washers provided and tighten as required. (The height can be slightly adjusted by bottom bolts as per Figure 10).

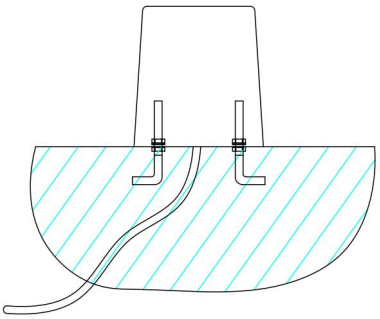

Figure 9

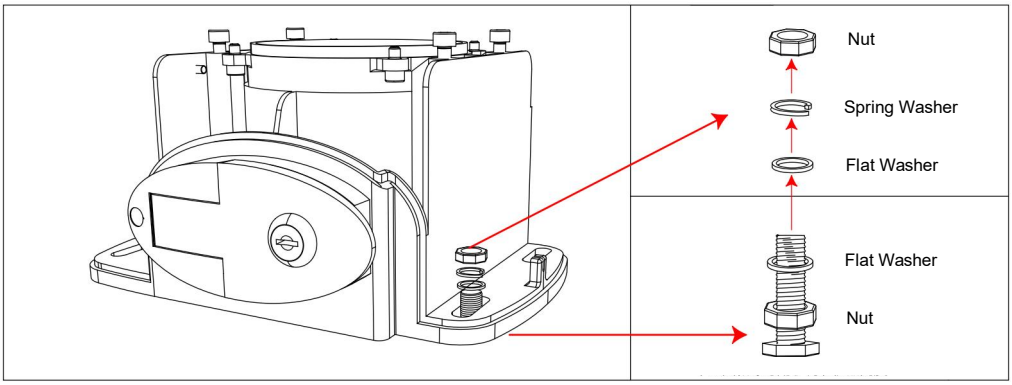

The bolts and flat washer between mounting plate and motor base are used for adjusting the height of the motor.

Figure 10

With Mounting Plate

· Drill holes as per Figure 8 for anchor bolts (or expansion bolts) and fit anchor bolts (or expansion bolts). (Expansion bolts need to be prepared by users).
· Fit and tighten anchor bolts (as per figure 11).
· Bolt motor to the mounting plate using the M8 x 40mm bolts with spring and flat washers provided and tighten as required (as per figure 12).

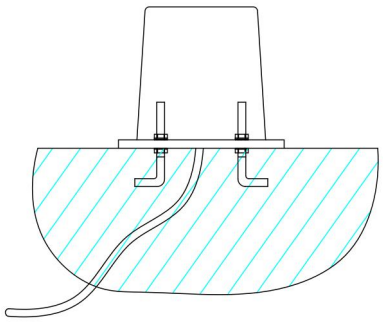

Figure 11

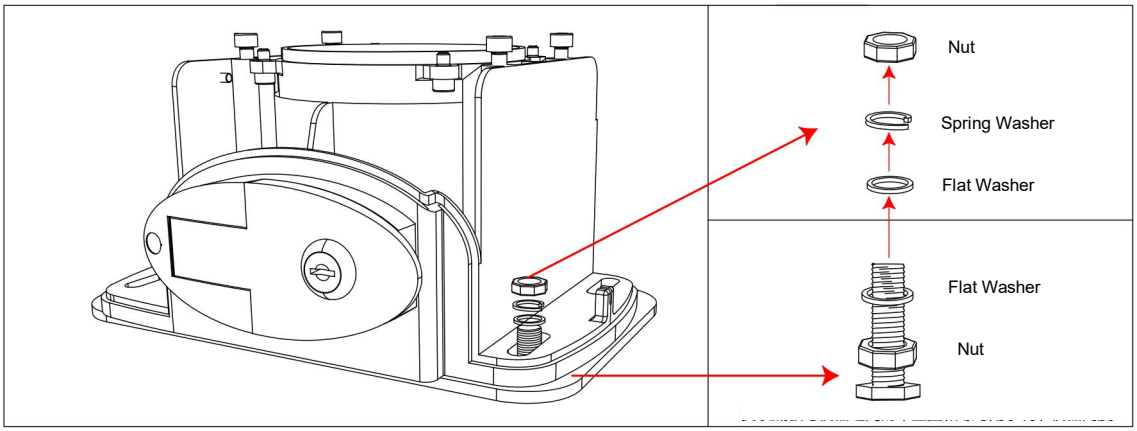

The bolts and flat washer between mounting plate and motor base are used for adjusting the height of the motor.

Figure 12

Fitting Motor

- Fit motor and mounting plate(if with) on the concrete footing.
- Ensure the motor output gear and gear rack are correctly aligned. Gear and gear rack should be centered as much as possible.
- Take the motor away from mounting plate.

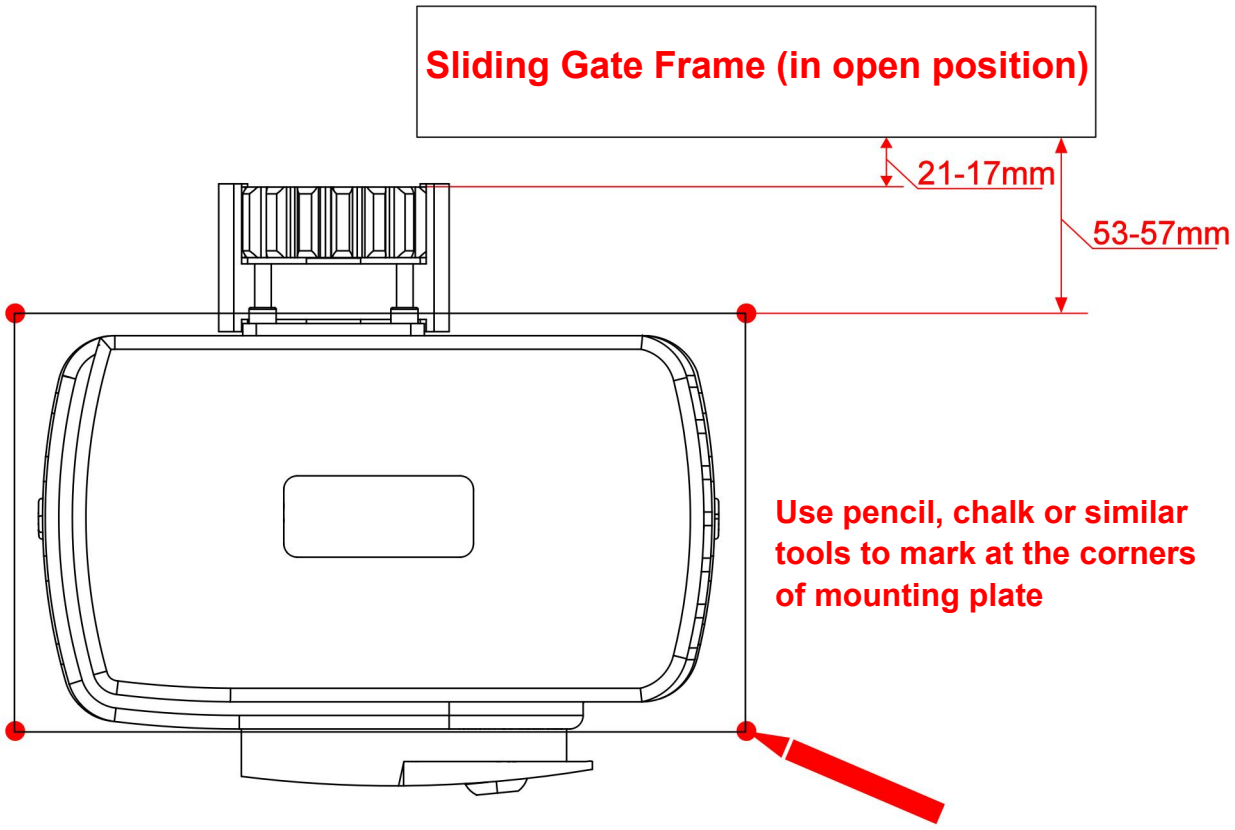

Figure 13

Step 6 - Gear Rack & Motor Alignment

- See Figure 15 for recommended gear rack mounting height.
- Ensure that the output gear has a minimum clearance of 1-2mm along the entire length of gear rack fitted to the gate (as per Figure 14)
- Ensure output gear and gear rack are correctly aligned. Under no circumstances should the gate opener output gear carry any weight of the gate. It is the task of the gate castors or wheels to carry the weight of the gate (as per Figure 14).
- If the gate doesn't slide freely by hand, adjust the height of the gear rack accordingly until the full length of gate slides freely by hand.

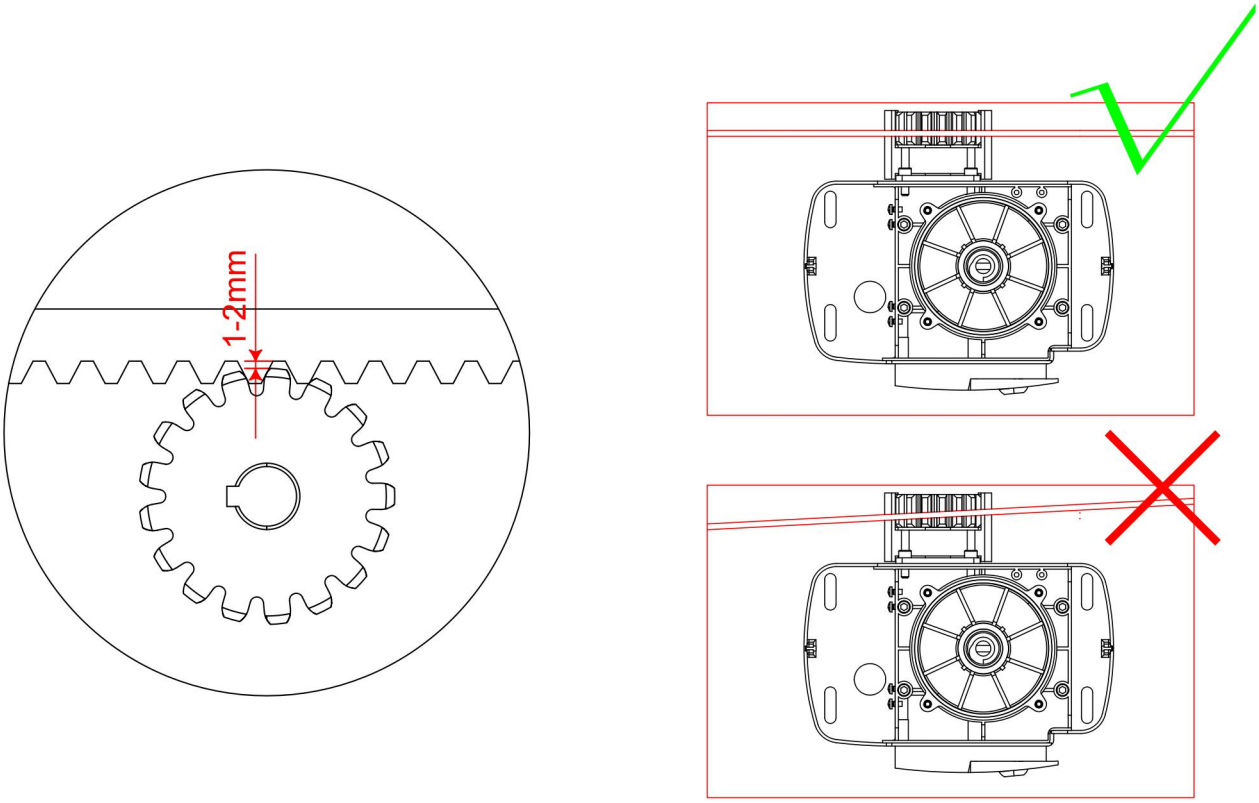

Figure 14

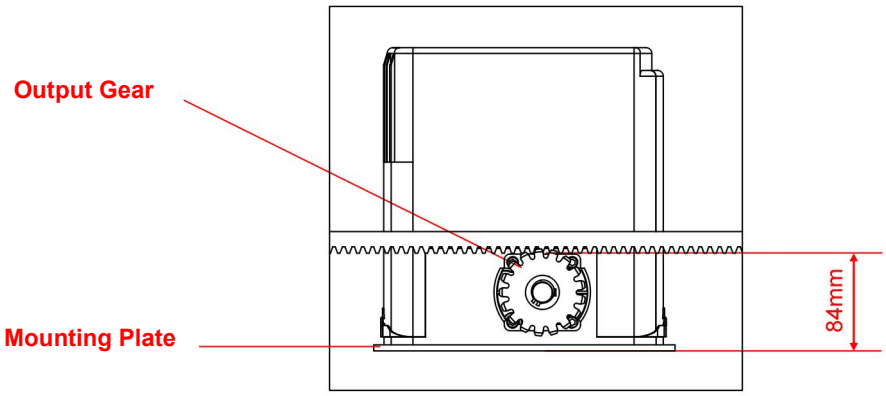

Figure 15

Step 7 - Limit Switch Stops

Included in your gate opener kit are two limit switch stops which must be fitted to the gear racks on your gate to ensure safe operation.

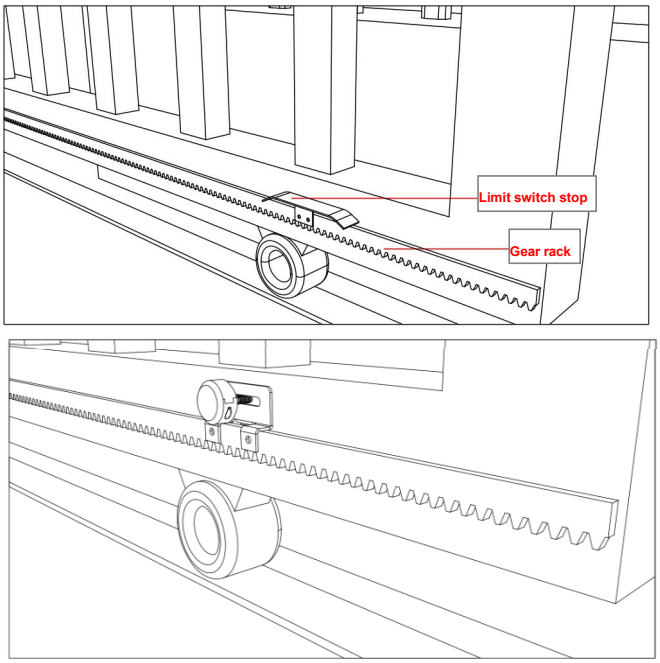

The limit switch stops are designed to set the desired opening and closing position of your gate. These limit switch stops are designed to come into contact with the spring/magnetic limit switch.

It is extremely dangerous that without or incorrect installation of the limit switch stops can cause crash of gate, damage of internal structure of the motor, moreover, the gate may slide off the guide rail.

Setting the Limit Switch Stops

Closed Position

- Position gate 150-200mm back from the gate end catch closed position. This will help in making sure you do not slam the gate into the end stop/catch when setting the closed position under power.
- Fit limit switch stop onto the top of gear rack at the point where it meets the Spring/Magnetic limit switch on the motor.
- Tighten locking screws of limit switch stop.

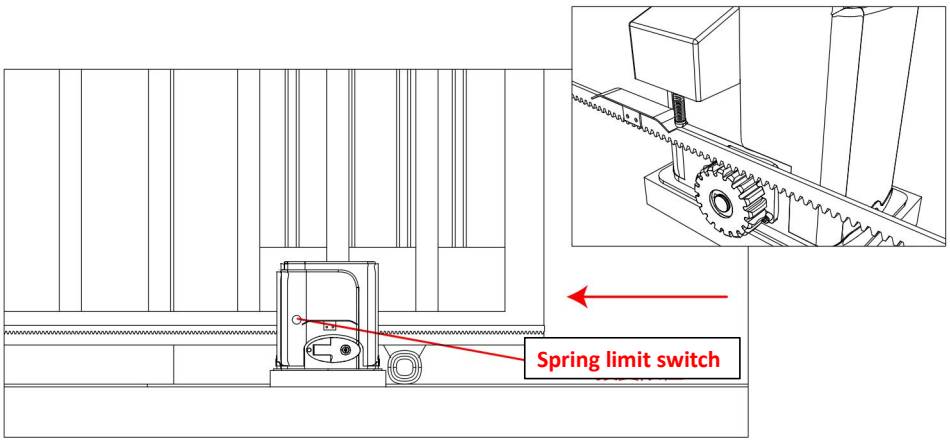

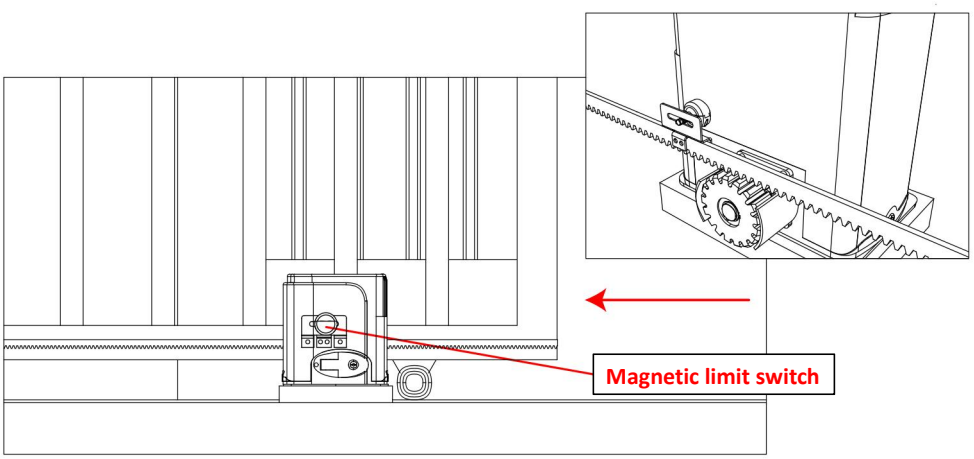

Open Position

- Position gate 150-200mm back from the gate stop open position. This will help in making sure you do not slam the gate into the end stop/catch when setting the open position under power.
- Fit limit switch stop onto the top of gear rack at the point where it meets the Spring/Magnetic limit switch on the motor.
- Tighten locking screws of limit switch stop.

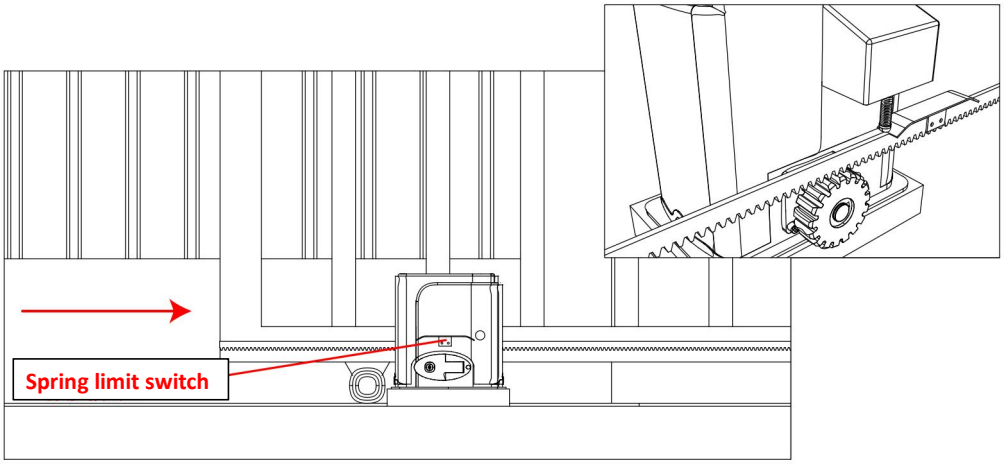

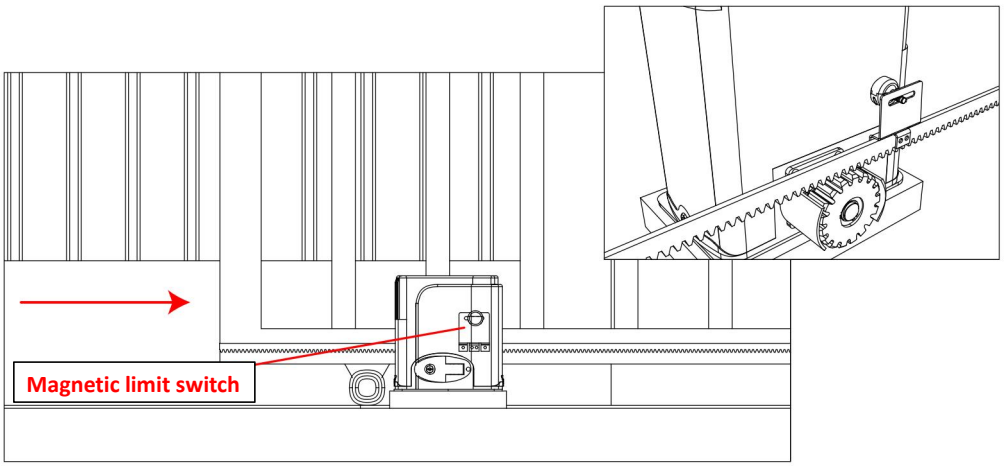

Test the spring/magnetic limit switch stops by moving the gate manually until you hear a click, making sure contact is made with the spring/magnetic limit switch on the motor.

To Reset: Turning the power off will reset the limit switch stop memory. Power on the gate opener again, pressing remote control or external push button switch to open and then close the gate once, then new limit switch stop setting is completed.

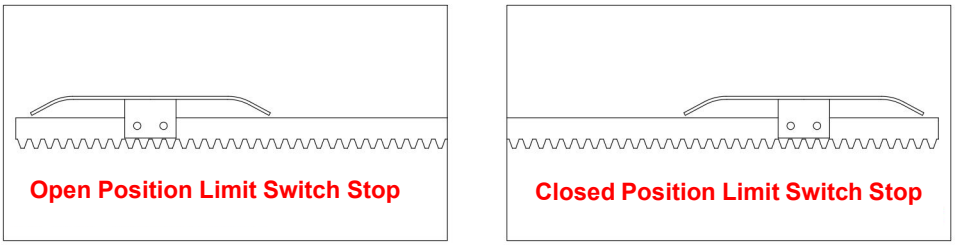

The installation of spring limit switch stops is shown in figure above.

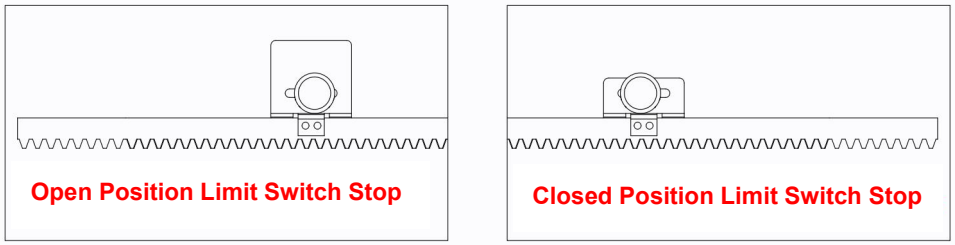

The installation of magnetic limit switch stops is shown in figure above.

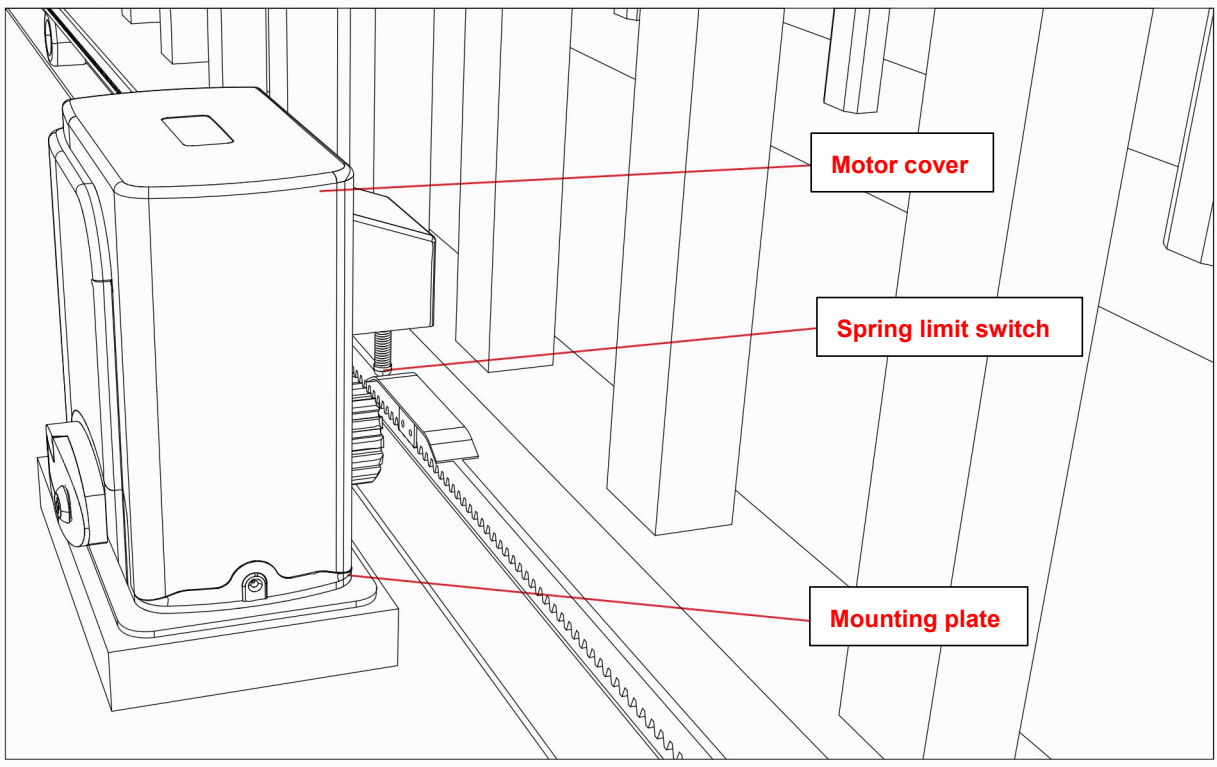

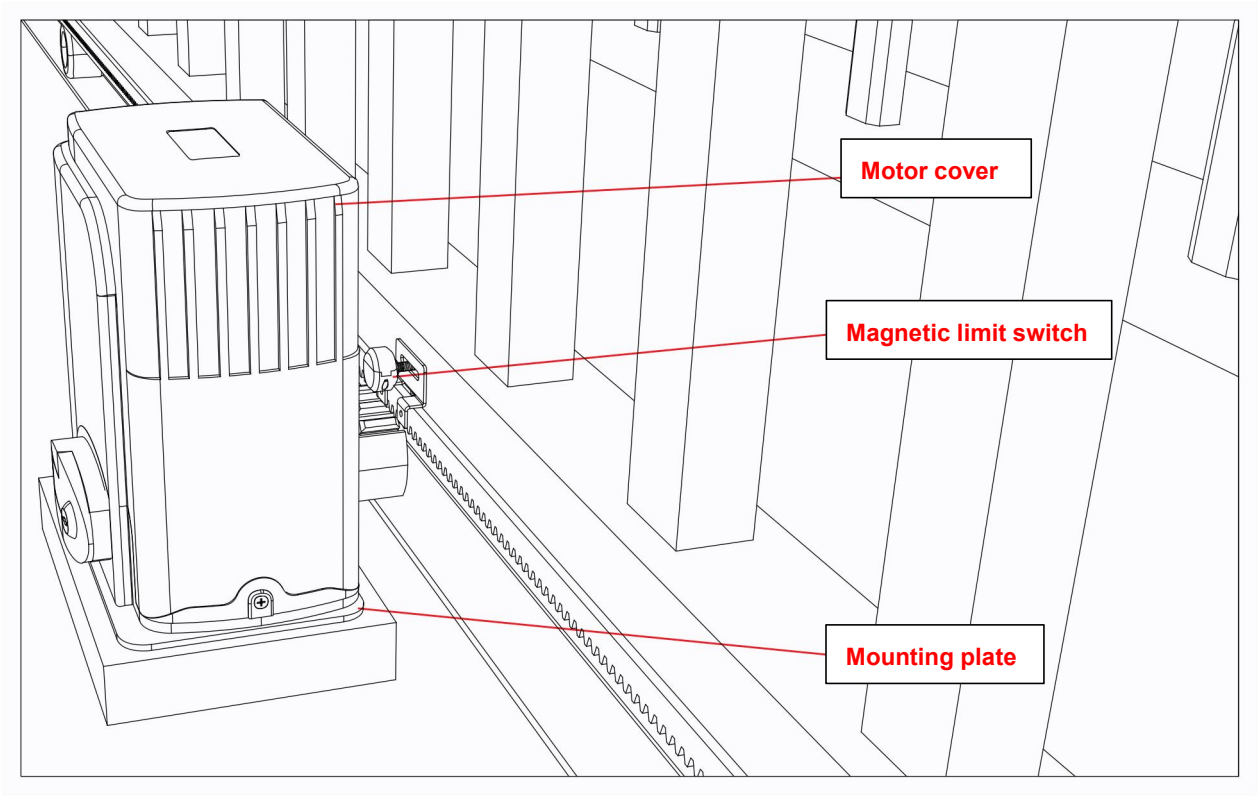

Open Position

Step 8 - Powering on

- Ensure that the outer cover has been fitted and fastened back onto the motor base.
- Before powering up the gate opener make sure the gate can travel by hand in manual mode (key unlocked).
- Slide the gate to between the middle of the posts, approximately (see below diagrams).
- Lock the manual release spanner (key locked) in readiness for automatic mode.
- Plug the power cord into an approved RCD protected weatherproof outlet.
- Remote controls included in this kit are factory paired ready for use.

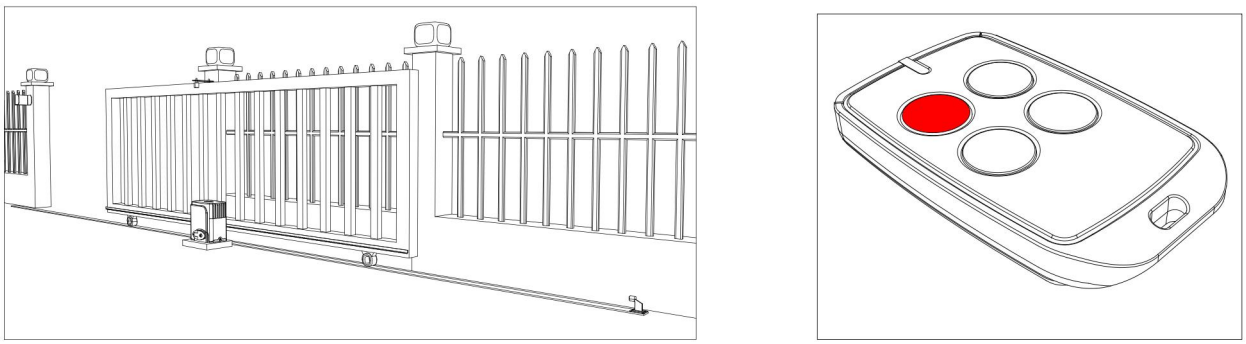

Figure 16

Step 9 - Testing Travel and Limit Stops

Testing the Closed Position

- Ensure gate opener is installed as per step 5, 6 and 7 and the sliding gate is in the middle position.
- Press remote (remotes included in kit are factory paired to the motor). The sliding gate will begin to close.
- The limit switch stop will hit the limit switch and the sliding gate will stop.
- When the gate stops, measure the distance remaining between the sliding gate and the desired closed position.
- You have now determined the closed position of the sliding gate when the limit switch stop hits the limit switch.
- Adjust the limit switch stop from the measurement you have taken to get your final gate closed position. The ideal closed final position for the gate frame is 10-15mm from closed gate end catch.

Testing the Open Position

- Press remote, the sliding gate will begin to open.
- The limit switch stop will hit the limit switch and the sliding gate will stop.
- When the gate stops, measure the distance remaining between the sliding gate and the desired open position.
- You have now determined the open position of the sliding gate when the limit switch stop hits the limit switch
- Adjust the limit switch stops from the measurement you have taken to get your final gate open position. The ideal open final position for the gate frame is 10-15mm from the gate stop.

To Reset:

- **When setting new limit stop positions please ensure that you turn the power off and then on again. Turning the power off will reset the limit stop memory, allowing for new limit switch stop positions to be recognized by the motor.**

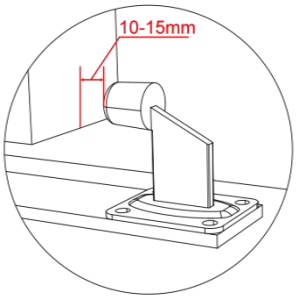

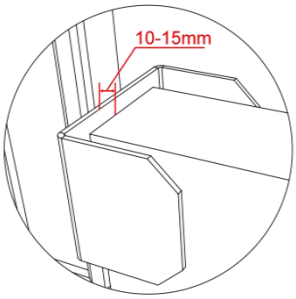

Now the basic open and closed positions are set, for further setting functions and adjusting parameters, please refer to pages 16-29 in this manual.

A Standard Control Board

Programming and Wiring

Any works to the 110V/220V AC must only be performed by a licensed electrician.

Ensure power is off before any modifications are made.

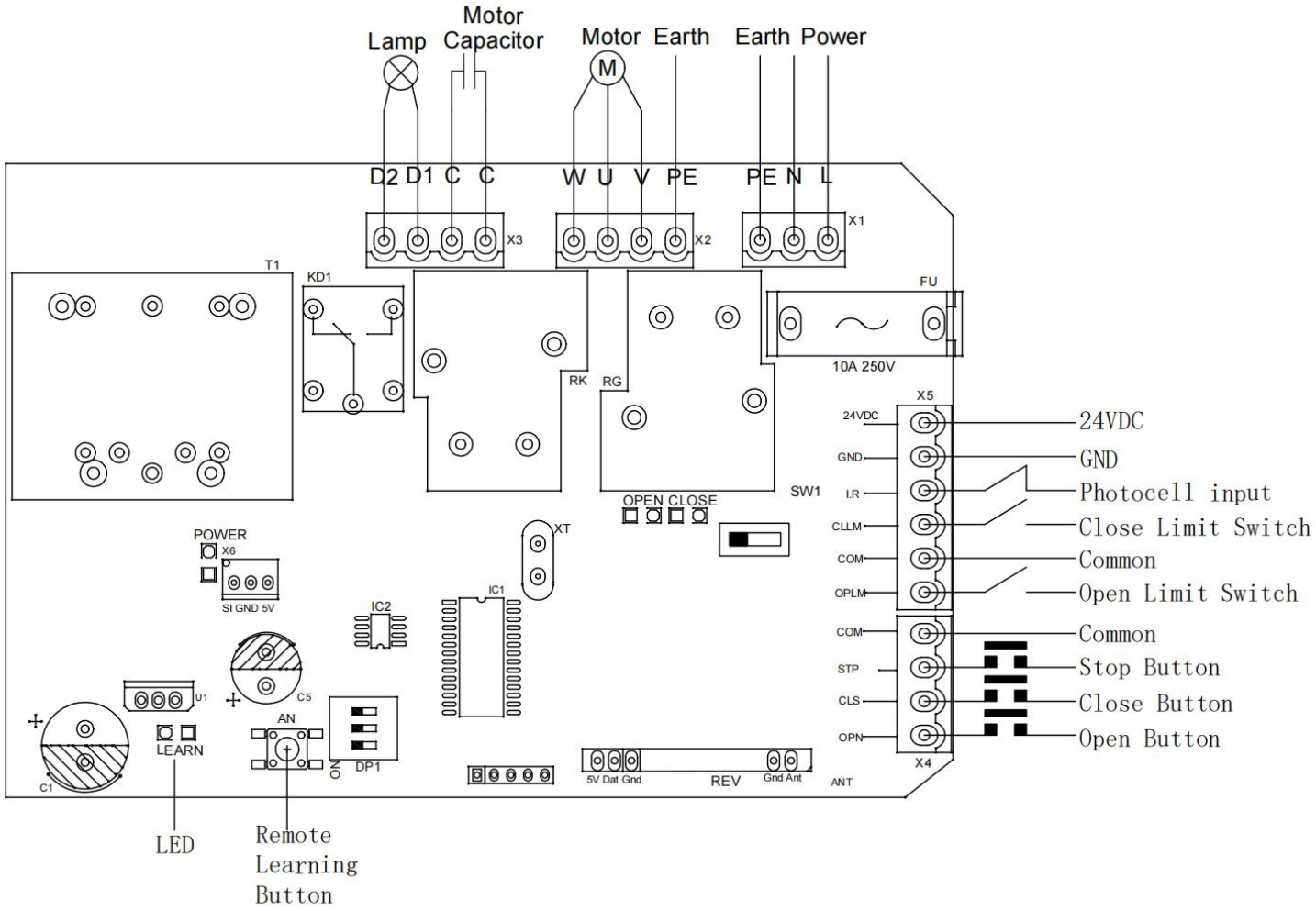

Figure 17

DIP Switch Adjustment

All changes to these settings must be completed by a licensed electrician.

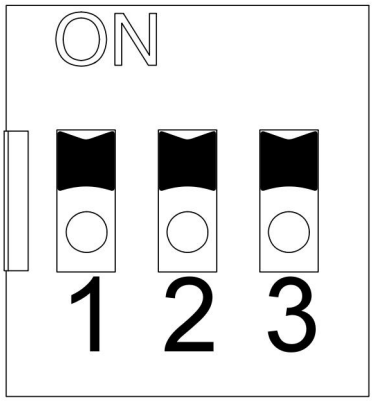

Figure 18

Number	Function	Description
1	**External Push Button Switch**	ON-Three button switch： X4 Terminal OPN - Open, CLS - Close, STP - Stop, COM - Common Terminal OFF-Single button switch： CLS and COM on X4 Terminal can be used to circularly control OPEN/STOP/CLOSE/STOP of the gate opener.
2 3	**Automatic Close Time**	Automatic close time setting: the gate is operated to open by remote control operation and will close automatically after a few seconds delay. 2 ON 3 OFF: automatic close delay time is 15s. 2 OFF 3 ON: automatic close delay time is 30s. 2 OFF 3 OFF: automatic close delay time is 45s. 2 ON 3 ON: No automatic close function. **Default setting: 2 ON 3 ON** **Disable the automatic close function.**

Terminal Instructions

All changes to these settings must be completed by a licensed electrician

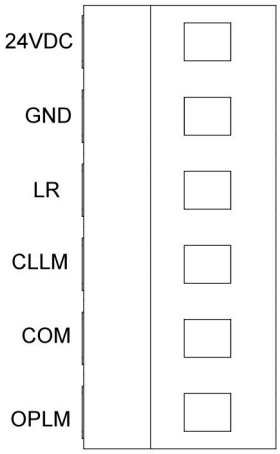

X5 Terminal: Limit Switch and Photocell Switch.
Additional accessories sold separately

24VDC: Positive Power Supply for Accessories +24VDC.
GND: Negative Power Supply for Accessories -GND.
LR: Photocell Input (N.C.).
If no photocell, connect LR and GND by a jumper.
CLLM: Close Limit Switch.
COM: Limit Switch Common Terminal.
OPLM: Open Limit Switch.

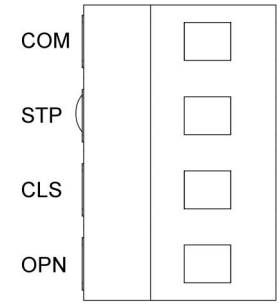

X4 Terminal: External Push Button.
COM: Common Terminal for External Push Button.
STP: External Stop Push Button Switch.
CLS: External Close Push Button Switch.
OPN: External Open Push Button Switch.

Note: If require to change the moving direction, the CLLM and OPLM on X5 Terminal have to be swapped with each other.

Wiring to the Terminal

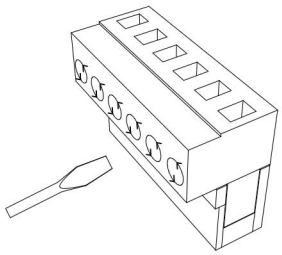

Using a screwdriver to loosen the screw on the side of the terminal.

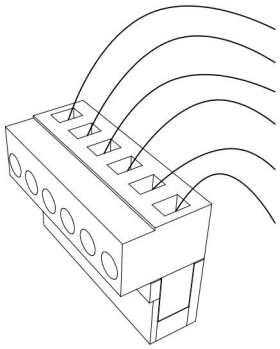

Insert the wire into the number on the terminal that you are looking to connect to. Refer to Pages 24.

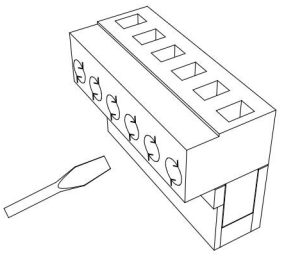

Tighten with a screwdriver to secure the wire in place.

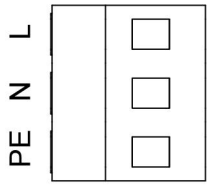

X1 Terminal:

L: Live Wire (brown wire).

N: Neural Wire (blue wire).

PE: Grounding Wire (yellow/green wire).

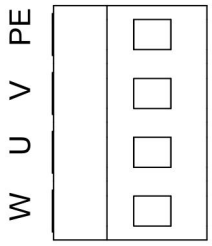

X2 Terminal:

PE: Earth

V: Common Terminal of Motor.

U: Motor Terminal. Switch SW1 will change gate moving direction.

W: Motor Terminal. Switch SW1 will change gate moving direction.

Note: If require to change the moving direction, not only the the switch SW1 need to be adjusted, but also CLLM and OPLM on X5 Terminal have to be swapped with each other.

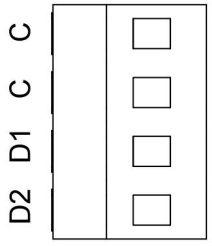

X3 Terminal:

C C: Motor Capacitor

D1 D2: Connection for warning lamp(AC220V).

Connecting Infrared Photocells

The below steps must be completed by a licensed electrician.

Highly recommend the use of infrared photocells as an additional safety feature.

While closing, if the ray of the Infrared Photocell is blocked, the gate will stop and reverse immediately, to protect user and property security. To install photocells, connect wiring as per Figure 25. You must remove the wire jumper between GND and LR on X5 terminal (refer to Figure 26).
The distance between photocell receiver and photocell transmitter should not be less than 2 meters; otherwise, the induction effect of photocell may be affected.

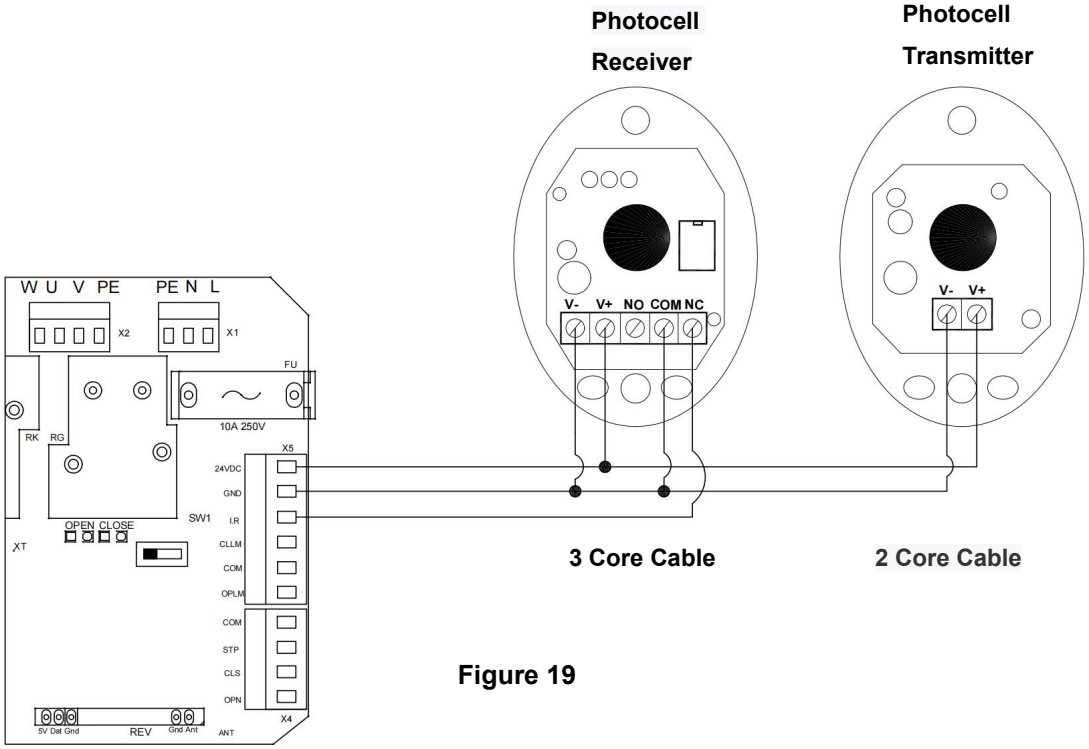

Figure 19

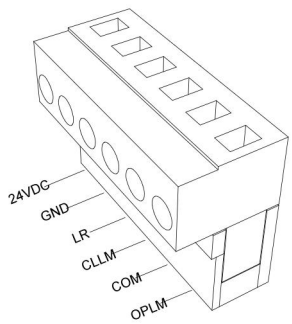

Loosen LR and GND on X5 Terminal with a screwdriver. Make sure the power is disconnected before doing so.

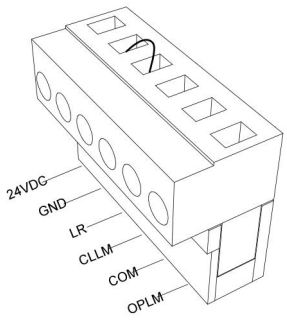

Remove the jumper wire between LR & GND on X5 Terminal.

Figure 20

WIFI Controller (Optional)

I. Main parameters of the module:

1). Power Supply: AC110V/220V

2). Output single channel signal

3). Can accept closed in place signal

II. Wiring Instruction

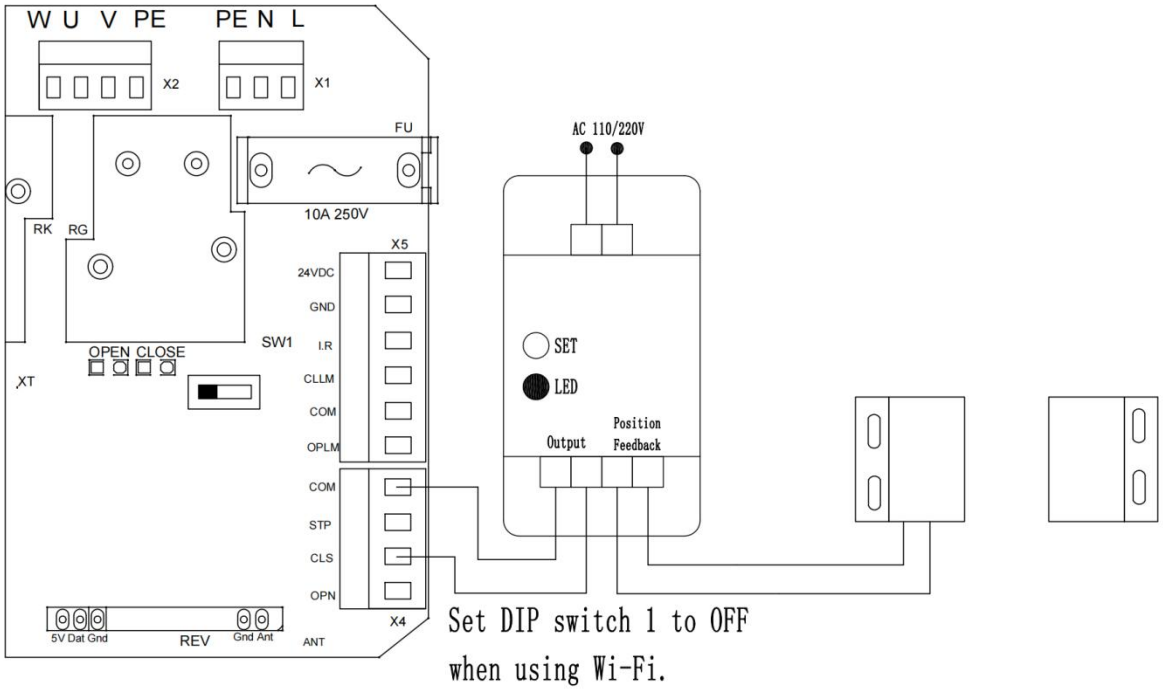

Figure 21

As shown above:

Output Terminal: Output signal, should connect to “O/S/C” and “COM” terminals on the motor control board.

Position Feedback Terminal: Open or Closed in place feedback signal. Should connect to open/closed in place terminal if the motor control board has a standalone terminal for it. If the control board doesn’t have a standalone terminal, then should connect to the door magnetic alarm.

Power: Should connect to AC 110V/220V mains power.

III. Connect to Equipment

Make sure your mobile phone has connected to the internet through 2.4G WIFI.

This WIFI device only supports 2.4G WIFI. If you router supports both 5G and 2.4G WIFI, please select 2.4G WIFI.

Download the Tuya or Smart Life App from App Store or Google Play Store.

During paring, make sure your mobile phone and WIFI device is connected to the same WIFI router.

Make sure the Mac address of your router is open, if not, please close the Mac flittering.

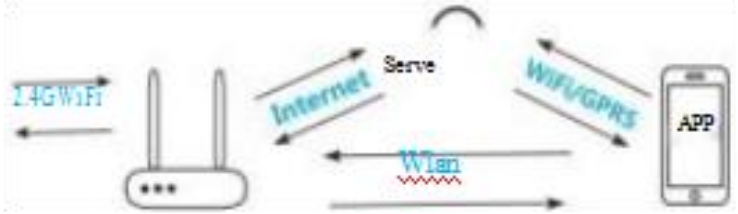

Figure 22

Figure 23

IV. APP Operation

Step 1: Open the App, click “add device”.

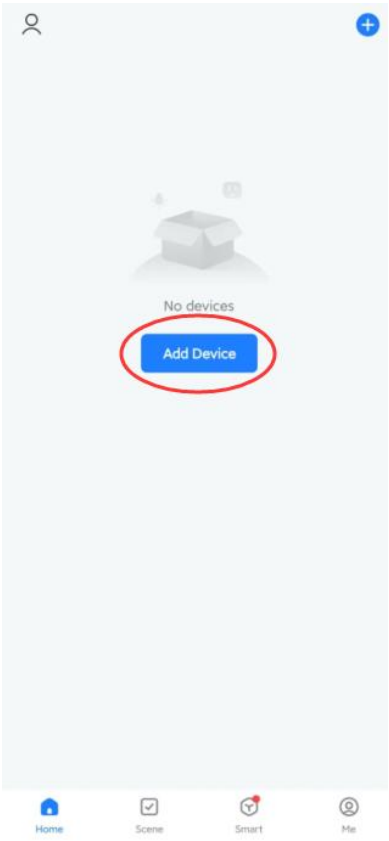

Figure 24

Step 2: If your mobile has connected to WIFI(must be 2.4GHz), long press the “reset” button on the WIFI device, your mobile will search the device automatically(Mark ①); If the device can not be found automatically, please add it under “Add Manually”(Mark ②): select Socket WIFI and follow its instructions to go proceed.



Figure 25

Step 3: After added, the device will be shown in the list, you can re-name it to your required.

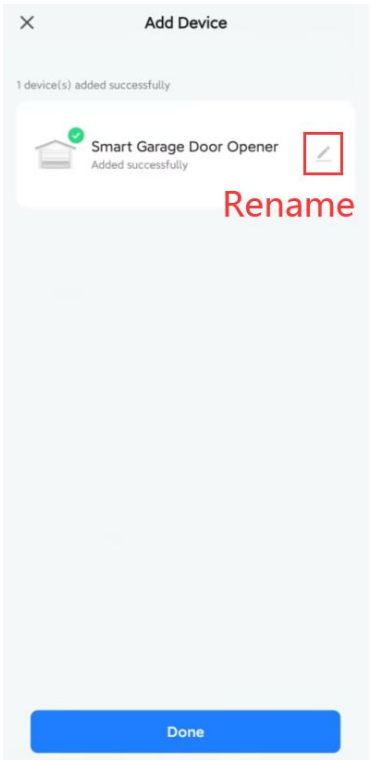

Figure 26

Step 4: Before using your mobile to control the motor, please operate your gate for a single(no matter open or close) travel and record the travel time, then go to the settings to set the run time, this run time should be decided according to your gate running travel. For example, the travel time of opening is 23 sec., you can set the run time to be 25s.(recommended to set it a little bit longer than travel time, default setting is 20 sec.) If you set the run time on the APP shorter than travel time, then after the time is up on the APP, but the travel still hasn't finished, there will be a reminder between this gap time:



Step 5: Now you can operate on your mobile, it will show "opening" while gate is opening, after reaching open limit switch, it will show opened. The same for closing.

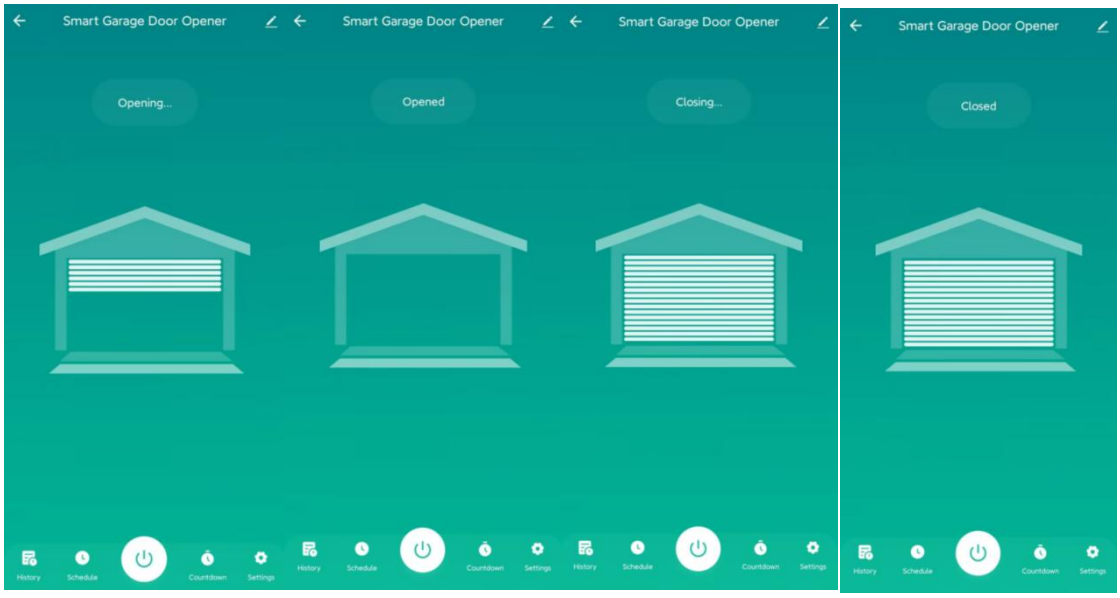

Figure 27

Note: If your motor control board doesn't have open/closed in place feedback signal, the app will send a reminder:





You can still control the opening and closing, but there is no feedback on the app after opened or closed.

It is suggested to use this WIFI control under your visible sight of the gate to avoid damage to persons or properties.

For specific operation teaching, please refer to the video 1(overall operation), video 2(record the travel time) and video 3(operation after adjustment)

Remote Control Operation

Three button mode remote control: OPEN/CLOSE/STOP of motor are controlled by three buttons separately on the remote control.
Single button mode remote control: OPEN/CLOSE/STOP of motor are controlled by one button circularly on the remote control

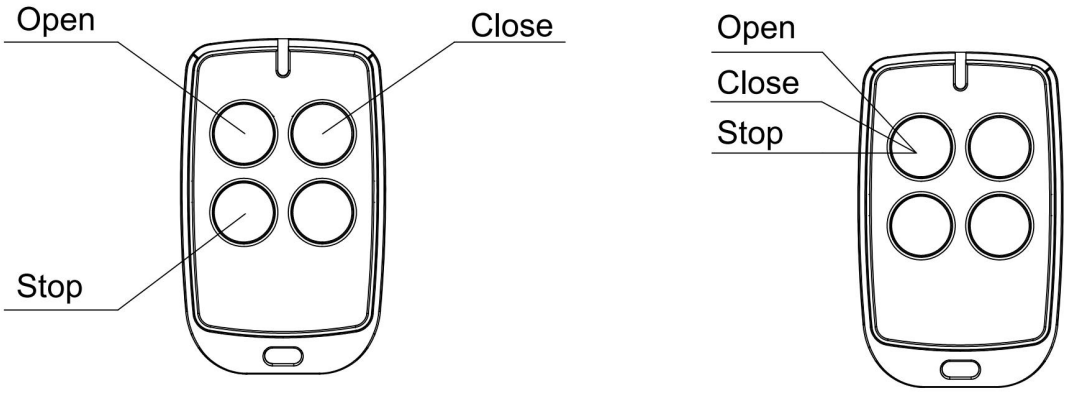

Three Button Mode Remote Control **Single Button Mode Remote Control**

Figure 28

Remote Control Learning

Remove the motor outer cover and continue to remove the transparent PCB cover, press the button ‘AN1’ on the control board, until the ‘LED2’ indicator light turns on, then release the button. While the light is on, press the button intended to be paired on the remote control twice, the ‘LED2’ indicator light will flash repeatedly and then turn off when remote control is paired. A maximum 25 remote controls can be paired to one gate opener.

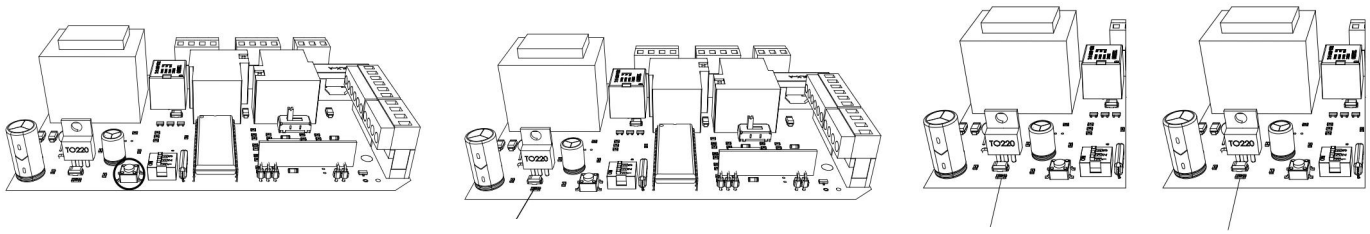

Press and hold the learn button (AN1) until ‘LED2’ flashes.

When the light is on, press the first button on the remote control twice.

The ‘LED2’ will flash repeatedly and then turn off. After which the remote is paired.

Clearing Remote Controls

To delete all paired remote controls, press and hold the button ‘AN1’, when the ‘LED2’ turns off, all previously paired remote controls will be deleted.

B Intelligent Control Board

Programming and Wiring

Any works to the 110V/220V AC must only be performed by a licensed electrician.
Ensure power is off before any modifications are made.

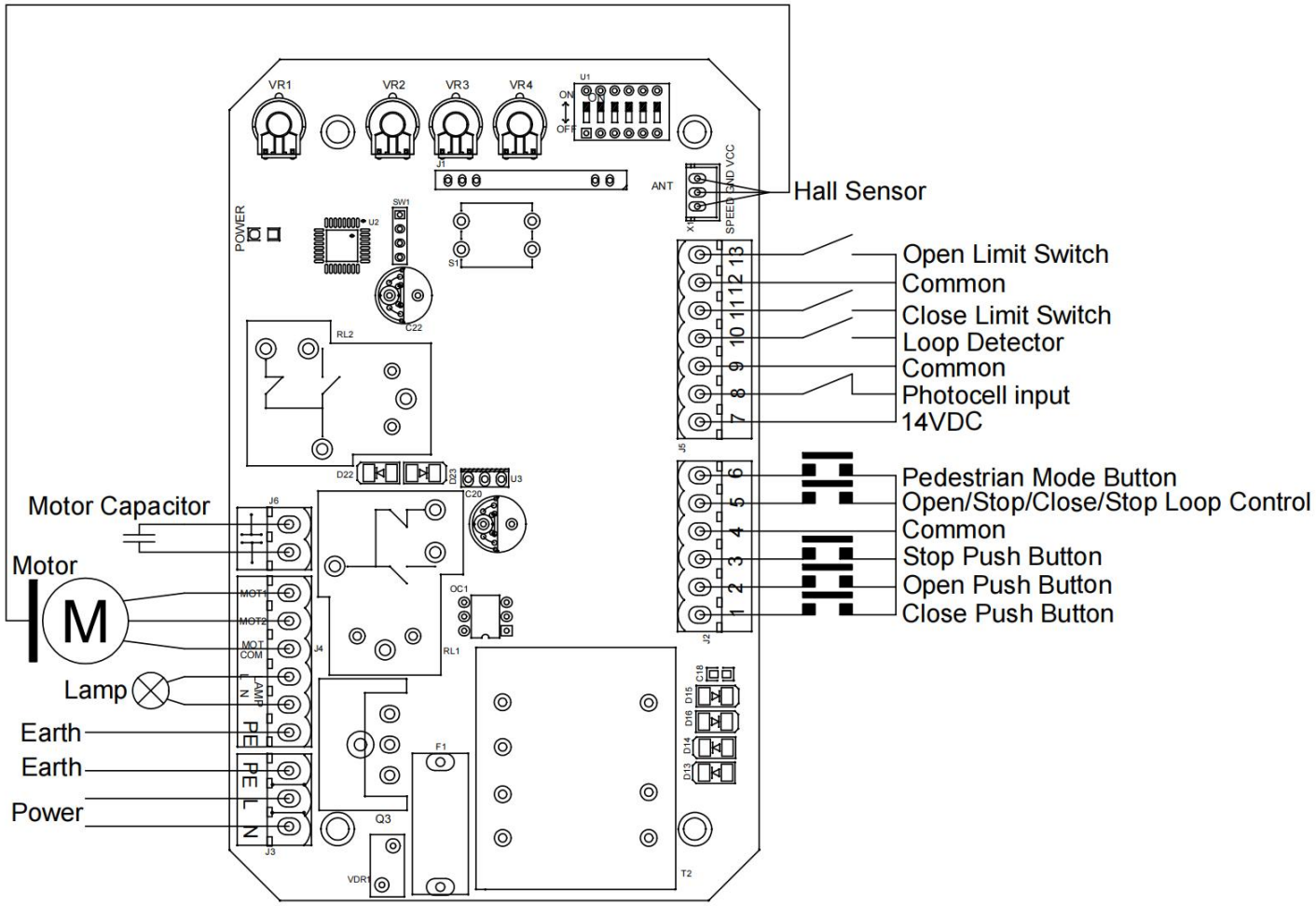

Figure 29

DIP Switch Adjustment

All changes to these settings must be completed by a licensed electrician

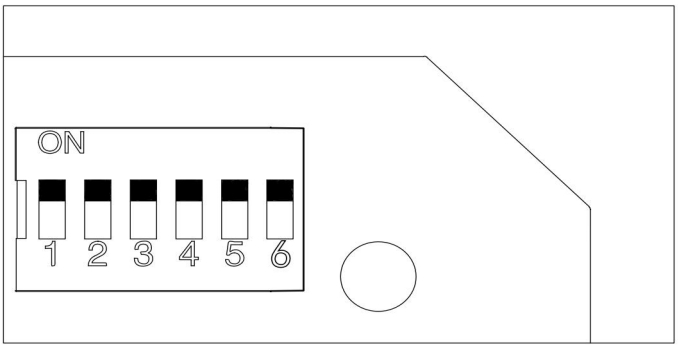

Figure 30

Number	Function	Description
1	**Soft Start/Close Function**	OFF–enabled ON–disabled Default position is OFF.
2	**Limit Switch Setting**	OFF–Normal Open ON–Normal Close Default position is OFF, this should align with limit switch and is not recommended to be modified by the users.
3	**Automatic Close Time Setting**	Automatic close time setting: the gate is operated to open by remote control operation and will close automatically after a few seconds delay. 3 OFF 4 ON: automatic close delay time is 12s. 3 ON 4 OFF: automatic close delay time is 24s. 3 ON 4 ON: automatic close delay time is 36s. 3 OFF 4 OFF: no automatic close function. **Default setting: 3 OFF 4 OFF** **Disable the automatic close function.**
4		
5	**Auto-reverse Function**	OFF-enable ON-disable Default position is OFF, this should align with the opener status and is not recommended to be modified by the users.
6 (optional)	**External button switch mode setting**	ON - External button switch is four button mode. OFF - External button switch is single button mode.

(optional):If your control board only has five dials, it is invalid.

Potentiometer Adjustment

All changes to these settings must be completed by a licensed electrician

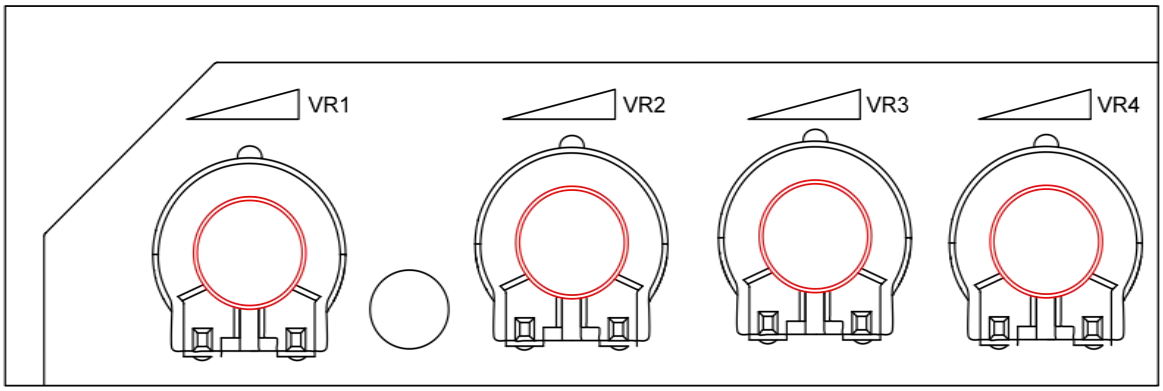

Figure 31

VR1: Stall Force Mode

Maximum = More Force = Less sensitive
Minimum = Less Force = More sensitive

When Stall Force Mode is enabled (Dip switch 5 is at OFF position), the gate opener will detect obstacles and impacts to the gate. If this is during opening, the gate will stop, if this is during closing the gate will stop, and then re-open. Rotate VR1 clockwise to increase the stall force, anti-clockwise to decrease.

For safety, we strongly recommend that Stall Force Mode is left enabled (Dip switch 5 is at the OFF position). Do not turn Dip switch 5 to the ON position.

VR2: Brake Force Adjustment

For adjusting brake force at the limit position during gate opening and closing. This should only be adjusted for heavy gates that need additional force to brake when limit switch is detected.
Rotate VR2 clockwise to increase, counter-clockwise to decrease. Default setting is at minimum.

VR3: Slow Start/Stop Width Adjustment

This switch controls how many seconds the gate opener operates at maximum speed.
Rotate VR3 clockwise to increase, rotate counter-clockwise to reduce.
When VR3 switches to minimum, slow start/stop function is disable.

VR4: Motor Output Force Adjustment

For best performance, set the torque at the lowest setting for secure use.
Rotate clockwise to increase, counter-clockwise to decrease.
Default setting is at maximum.

Terminal Instructions

All changes to these settings below must be completed by licensed electrician.

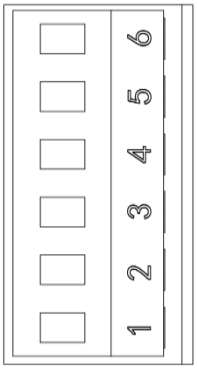

J2 Terminal (as per Figure 15):

Terminal 6: External Push Button Pedestrian Switch
Terminal 5: External Open/Stop/Close/Stop Loop Control Push Button (Repeated Open/Stop/Close)
Terminal 4: Common Terminal for All External Control Push Button
Terminal 3: External Stop Push Button Switch.
Terminal 2: External Open Push Button Switch.
Terminal 1: External Close Push Button Switch.

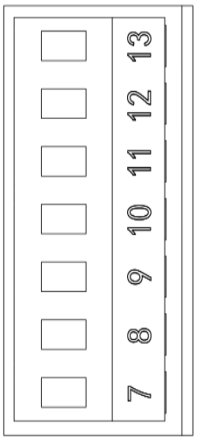

J5 Terminal: Limit Switch and Accessories
Additional accessories sold separately

Terminal 13: Open Limit Switch
Terminal 12: Limit Switch Common Terminal
Terminal 11: Close Limit Switch
Terminal 10: Loop Detector Connector (Pre-wired by Factory)
Terminal 9: Ground/Earth (GND)
Terminal 8: Photocell input (N.C.). **If no photocell is fitted, use a jumper between terminals 8 & 9.**
Terminal 7: Power supply for accessories (+15V)

Note: If require to change the moving direction, the wires of 11 and 13 on J5 Terminal have to be swapped with each other.

Wiring to the Terminal

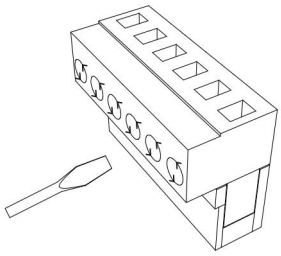

Using a screwdriver to loosen the screw on the side of the terminal.

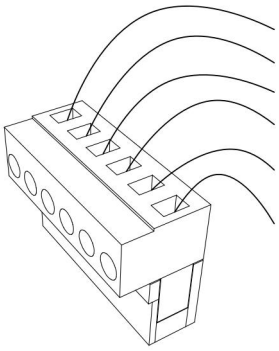

Insert the wire into the number on the terminal that you are looking to connect to. Refer to Page 17.

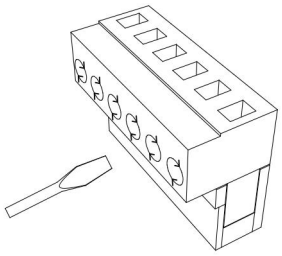

Tighten with a screwdriver to secure the wire in place.

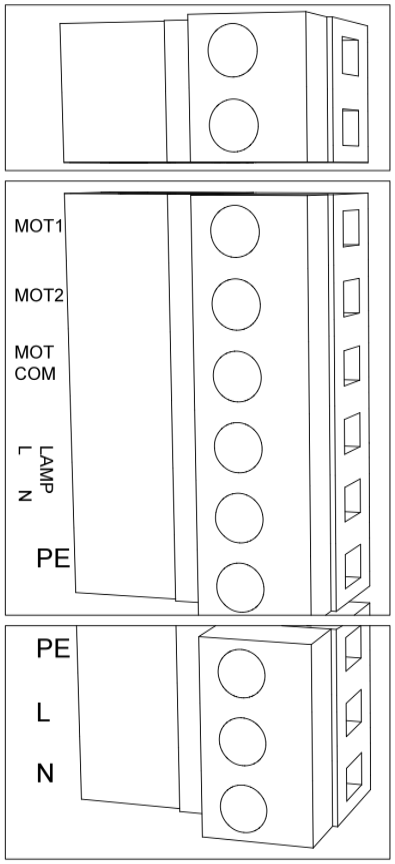

J6 Terminal:
Motor Capacitor

J4 Terminal:
MOT1: Motor Terminal, swap with MOT2 to change gate moving direction.
MOT2: Motor Terminal, swap with MOT1 to change gate moving direction.
MOTCOM: Motor Common Terminal.
LAMP (L&N): Connection for warning lamp.
PE: Motor and warning lamp earth
Note: If require to change the moving direction, not only MOT1 and MOT2 wires need to be swapped, but also the wires of 11 and 13 on J5 Terminal have to be swapped with each other.

J3 Terminal:
PE: Earth (yellow/green wire).
L: Power (brown wire).
N: Power (blue wire).

Connecting Infrared Photocells

The below steps must be completed by licensed electrician.

Highly recommend the use of infrared photocells as an additional safety feature.

While closing, if the ray of the Infrared Photocell is blocked, the gate will stop and reverse immediately, to protect user and property security. To install photocells, connect wiring as per Figure 20. You must remove the wire jumper between terminal 8 and terminal 9 on J5 (ref to Figure 21).

The distance between photocell receiver and photocell transmitter should not be less than 2 meters; otherwise, the induction effect of photocell may be affected.

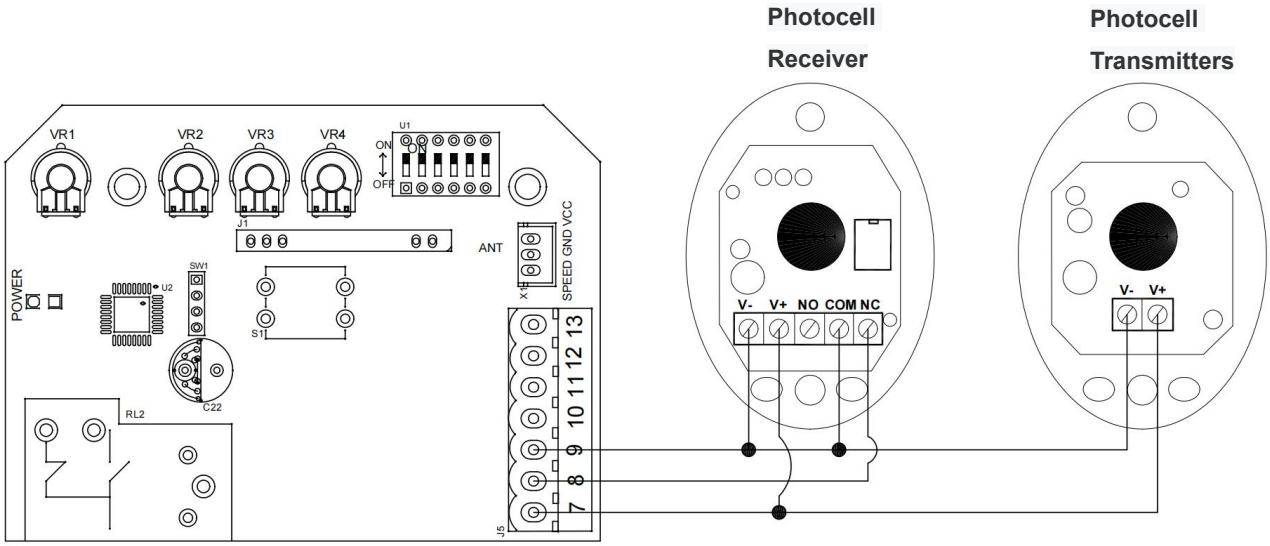

Figure 32

Before Installing Photocells

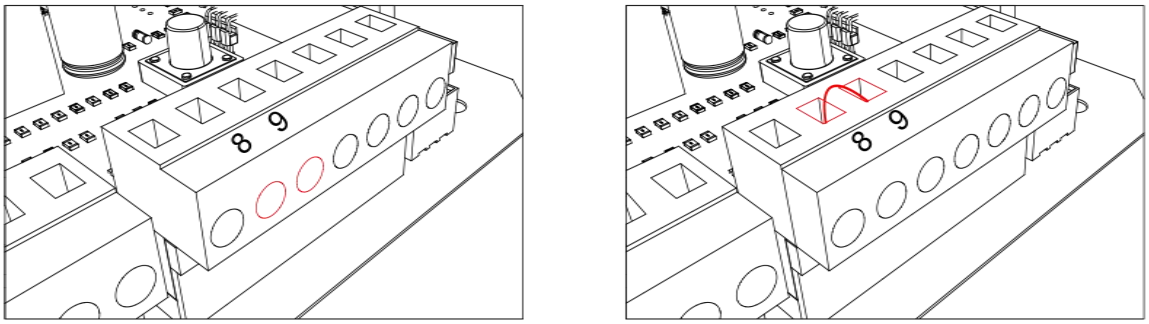

Figure 33

Loosen 8 and 9 ports on J5 Terminal with a screwdriver. Make sure the power is disconnected before doing so.

Remove the wire jumper between ports 8 & 9 on J5 Terminal.

WIFI Controller (Optional)

I. Main parameters of the module:

1). Power Supply: AC110V/220V

2). Output single channel signal

3). Can accept closed in place signal

II. Wiring Instruction

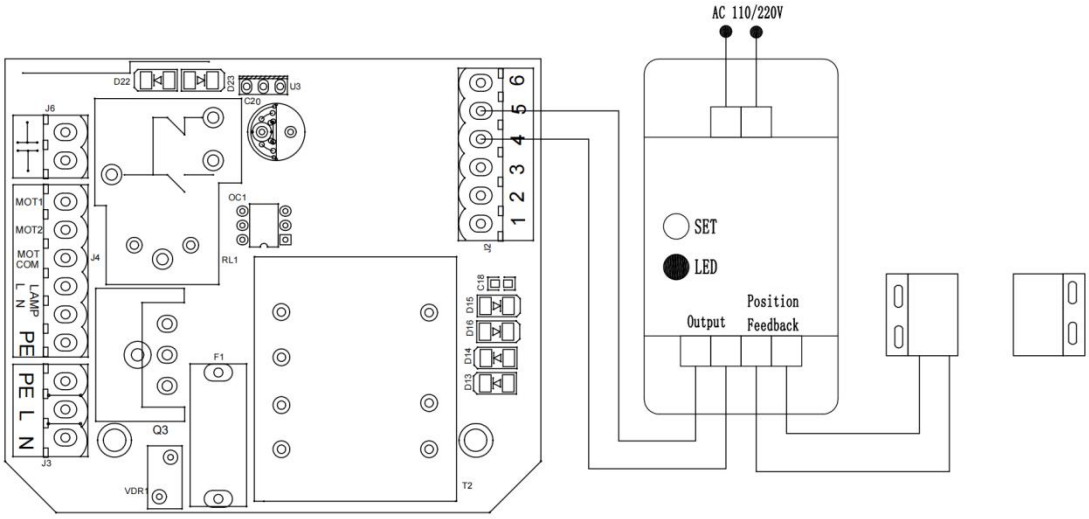

Figure 34

As shown above:

Output Terminal: Output signal, should connect to “O/S/C” and “COM” terminals on the motor control board.

Position Feedback Terminal: Open or Closed in place feedback signal. Should connect to open/closed in place terminal if the motor control board has a standalone terminal for it. If the control board doesn’t have a standalone terminal, then should connect to the door magnetic alarm.

Power: Should connect to AC 110V/220V mains power.

III. Connect to Equipment

Make sure your mobile phone has connected to the internet through 2.4G WIFI.
This WIFI device only supports 2.4G WIFI. If you router supports both 5G and 2.4G WIFI, please select 2.4G WIFI.
Download the Tuya or Smart Life App from App Store or Google Play Store.
During paring, make sure your mobile phone and WIFI device is connected to the same

WIFI router.
Make sure the Mac address of your router is open, if not, please close the Mac flittering.

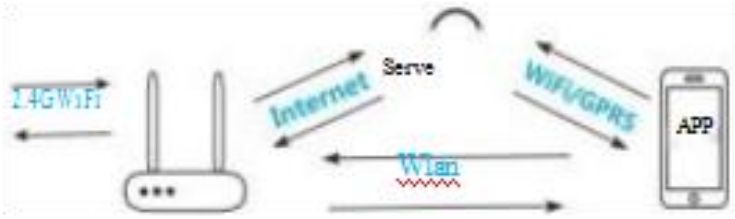

Figure 35

Figure 36

IV. APP Operation

Step 1: Open the App, click “add device”.

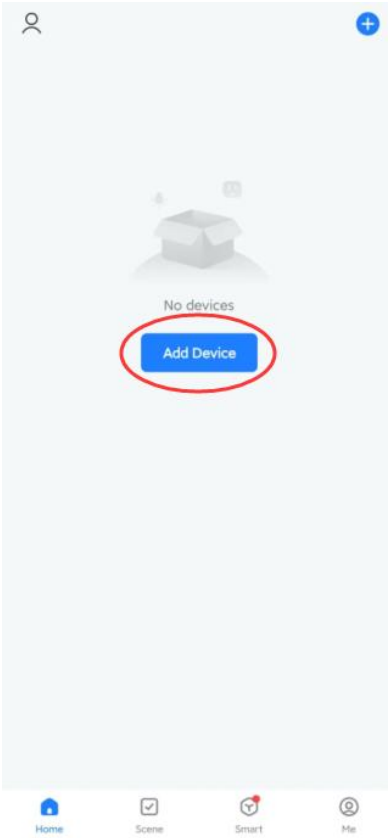

Figure 37

Step 2: If your mobile has connected to WIFI(must be 2.4GHz), long press the “reset” button on the WIFI device, your mobile will search the device automatically(Mark ①); If the device can not be found automatically, please add it under “Add Manually”(Mark ②): select

Socket WIFI and follow its instructions to go proceed.



Figure 38

Step 3: After added, the device will be shown in the list, you can re-name it to your required.

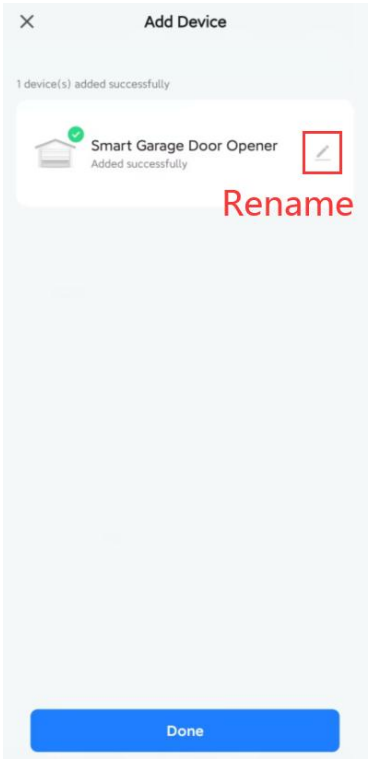

Figure 39

Step 4: Before using your mobile to control the motor, please operate your gate for a single(no matter open or close) travel and record the travel time, then go to the settings to set the run time, this run time should be decided according to your gate running travel. For example, the travel time of opening is 23 sec., you can set the run time to be 25s.(recommended to set it a little bit longer than travel time, default setting is 20 sec.) If you set the run time on the APP shorter than travel time, then after the time is up on the APP, but the travel still hasn't finished, there will be a reminder between this gap time:



Step 5: Now you can operate on your mobile, it will show “opening” while gate is opening, after reaching open limit switch, it will show opened. The same for closing.

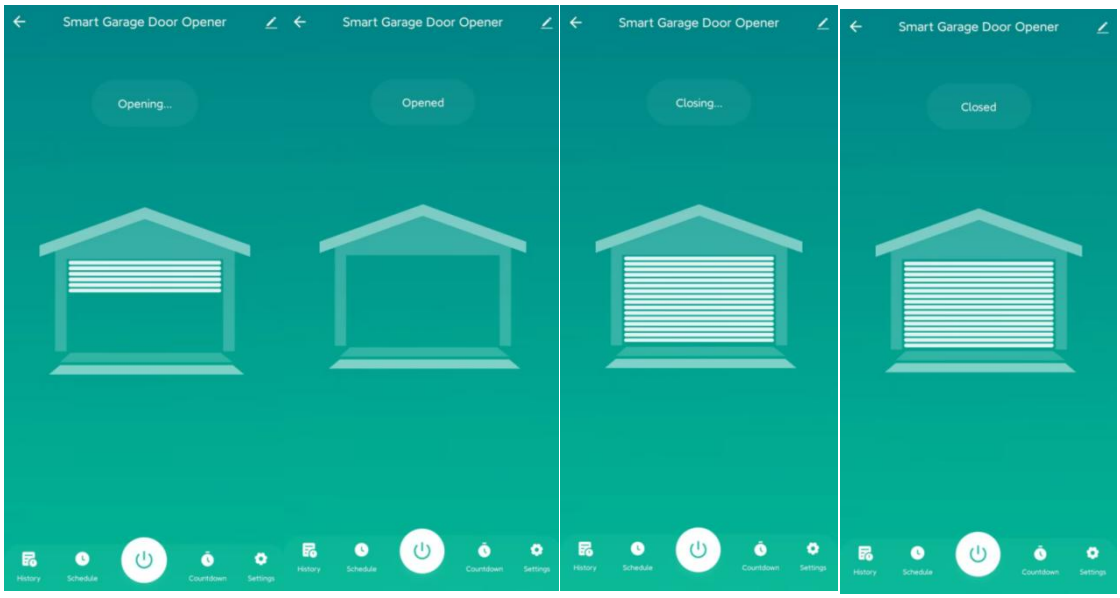

Figure 40

Note: If your motor control board doesn’t have open/closed in place feedback signal, the app will send a reminder:

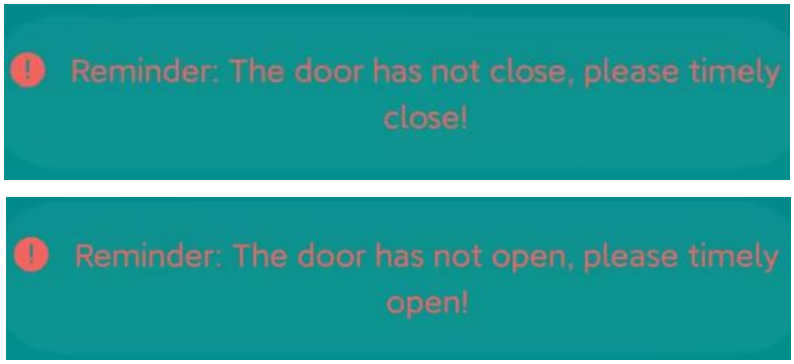

You can still control the opening and closing, but there is no feedback on the app after opened or closed.

It is suggested to use this WIFI control under your visible sight of the gate to avoid damage to persons or properties.

For specific operation teaching, please refer to the video 1(overall operation), video 2(record the travel time) and video 3(operation after adjustment)

Remote Control Operation

Three button mode remote control: OPEN/CLOSE/STOP of motor are controlled by three buttons separately on the remote control.
Single button mode remote control: OPEN/CLOSE/STOP of motor are controlled by one button circularly on the remote control.
The forth button on remote control is Pedestrian Mode--press the forth button while the gate is closed, the gate will open 1m wide to allow pedestrian access.

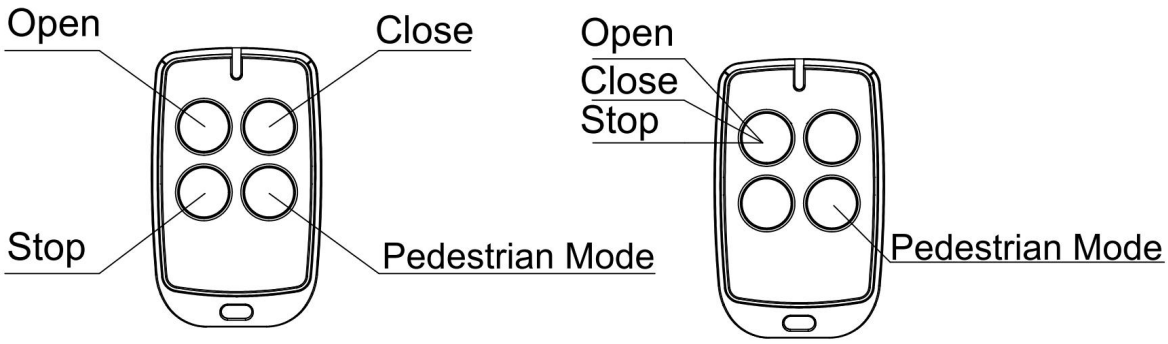

Three Button Mode Remote Control **Single Button Mode Remote Control**

Figure 41

Remote Control Learning

Remove motor outer cover and continue to remove the transparent PCB cover, press the button ‘S1’ on the control board, until the ‘LEARN’ indicator light turns on, then release the button. While the light is on, press the button intended to be paired on the remote control twice, the ‘LEARN’ indicator light will flash repeatedly and then turn off when remote control is paired. A maximum 40 remote controls can be paired to one motor.

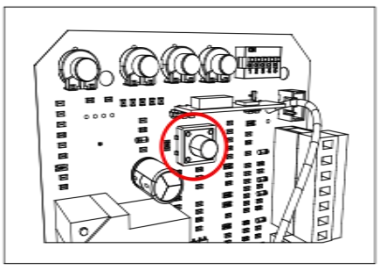

Press and hold learning button(S1) until the Learn LED flashed on.

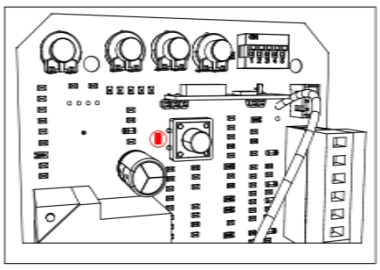

While the light is on, press the first button on the remote control twice

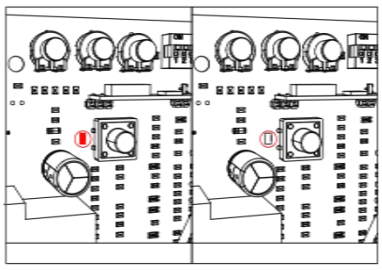

The Learn LED will flash repeatedly and then turn off, when the remotes is paired.

Clearing Remote Controls

To delete all paired remote controls, press and hold the button ‘S1’ till LEARN LED turns on. When the LEARN LED turns off, all previously paired remote controls will be deleted.

Maintenance

The gate should be checked every month to make sure it operates normally.
For the sake of safety, each gate is suggested to be equipped with infrared protector, and regular inspection is required.
Before installation and operation of the gate opener, please read all instructions carefully.
Our company keep the right to change the instruction without prior notice.

Troubleshooting

Any troubleshooting work below done to the motor must be completed by a licensed electrician and only whilst the power is off and the motor is unplugged!

Problem	Possible Reason	Solution
The gate cannot open or close normally, and LED does not light.	1. The power supply is disconnected. 2. Fuse is blown. 3. Control board X1 terminal wrongly wired.	1. Connect the power supply. 2. Check the fuse (FU) and replace if blown. 3. Re-wiring according to user manual.
The gate can only open, but cannot close.	1. Photocell wrongly wired. 2. Photocell wrongly installed. 3. Photocell is blocked by objects. 4. Sensitivity of obstacle is too high (Intelligent type). 5. Hall sensor parts damaged (Intelligent type).	1. If not connect photocell, please ensure the infrared port and GND port has a jumper wire; if connect photocell, please ensure the wiring is correct and the photocell status is N.C. 2. Ensure that the photocell mounting position can be mutually aligned. 3. Remove the obstacle. 4. Reduce the sensitivity of obstacle. 5. Replace hall sensor parts.
Remote control doesn't work.	1. Battery level is too low. 2. Remote control not paired.	1. Change the battery. 2. Pair the remote control to the gate opener.
Press OPEN, CLOSE button, the gate is not moving, motor has noise.	1. Capacitor damaged. 2. Capacitor is poor connected. 3. Gate moving is not smoothly	1. Change capacitor. 2. Check the capacitor wiring. 3. Adjust the motor or gate according to the actual situation.
Not stop when running to opening or closing limit switch position.	1. The opening or closing limit switch is in opposite. 2. Magnetic limit switch badly installed.	1. Check whether the limit switch wiring is consistent with the motor running direction. 2. Check whether the distance and

		height between magnetic limit switch and motor reaches to standard requirement.
Leakage switch tripped.	Power supply cable short circuit or motor wire short circuit.	Check wiring.

Drawing and Measurements

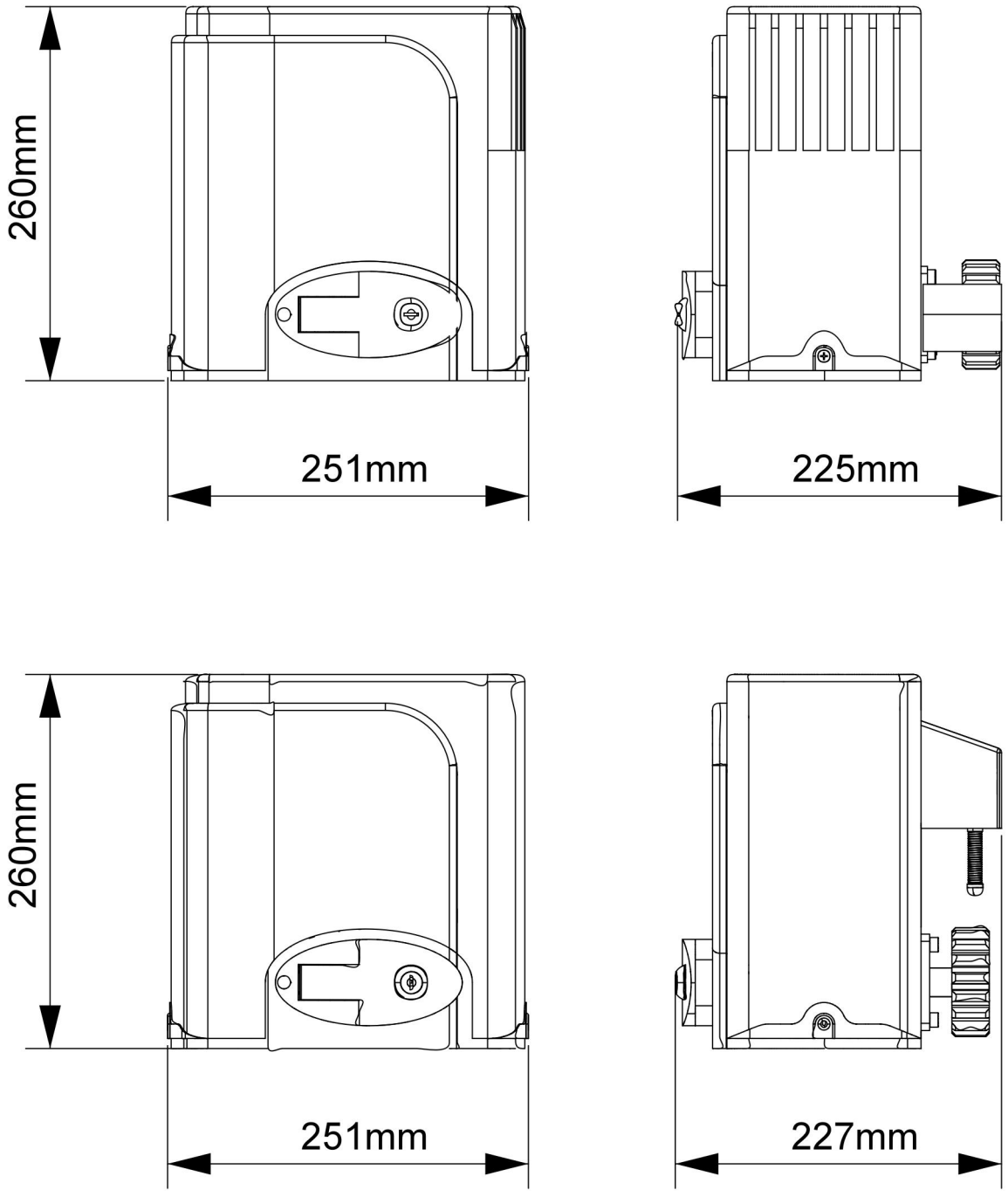

Figure 28

Warranty

Warranty Ordinance

1. To repair against this warranty card and invoice during the warranty period.
2. Warranty period: 1 year after the date of invoice.
3. Without unauthorized dismantling, any product broken or damage due to quality problem, we'll offer the repair service for free or replace for free.
4. The malfunction and damaged caused by incorrect use or man fault is not covered by this warranty.

Maintenance Record

Check Date	Check Content	Maintained by